innovair®

Installer and User Manual

24V Mini-Adapter Kit

M Series

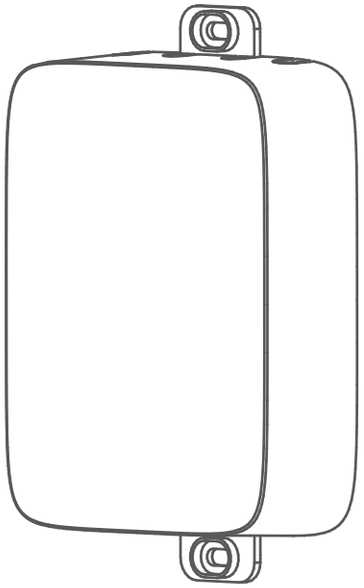

17222000A68532

IMPORTANT NOTE:

Please read this manual carefully before installing or operating your wired remote controller. Make sure to save this manual for future reference.

This manual gives detailed description of the precautions that should be brought to your attention during operation.

In order to ensure correct service of the adapter plate please read this manual carefully before using the unit.

For convenience of future reference, keep this manual after reading it.

All the pictures in this manual are for explanation purpose only. There may be slightly different from the adapter plate you purchased (depend on model). The actual shape shall prevail.

Table of Contents

1. Safety precaution 1
2. Installation accessory 2
3. Installation method 4
4. Specification 10
5. Application 10

1. Safety precaution

⚠ WARNING

- Please entrust the distributor or professionals to install the unit.
- Installation by other persons may lead to imperfect installation, electric shock or fire.
- Adhere to this installation manual.
- Imporper installation may lead to electric shock or fire.
- Reinstallation must be performed by professionals.

Do not uninstall the unit randomly.
Random uninstalling may lead to abnormal operation, heating or fire of the air condition.

NOTE

- Do not install the unit in a place vulnerable to leakage of flammable gases. Once flammable gases are leaked and left around the adapter plate, fire may occure.
- Do not operate with wet hands or let water enter the adapter plate. Otherwise, electric shock may occur.
- The wiring should adapt to the adapter plate current. Otherwise, electric leakage or heating may occur and result in fire.

NOTE

- The specified cables shall be applied in the wiring. No external force may be applied to the terminal. Otherwise, wire cut and heating may occur and result in fire.

2. Installation accessory

Select the installation location

Don’t install in places with heavy oil, vapor or sulfureted gas, as this will damage product leading to system malfunction.

Preparation before installation

1. Please confirm that all the following parts you have been supply.

No.	Name	Qty.	Remarks
1	Adapter plate(24v)	1	————————
2	Installation and owner’s manual	1	————————
3	Screws	2	M3.9*25 (For Mounting on the Wall)
4	Wall plugs	2	For Mounting on the Wall
5	The connective wires group	3	Separately for connecting the internal board and adapter plate(24V)
6	Screw	1	M4X8(For Mounting the connective wire group)
7	Transformer	1	For use only on 24 volt circuits and buy it yourself

2. Prepare the following assemblies on the site.

No.	Name	Qty.(embeded into wall)	Specification (only for reference)	Remarks
1	screwdriver set	1	————	————

Precaution of installing the adapter plate.

1. This manual provides the installation method of adapter plate. Please refer to the wiring diagram of this installation manual to connect the adapter plate with indoor unit.
2. The adapter plate works in low voltage loop circuit. Do not directly connect high voltage (115VAC, 220VAC, 380VAC), to low voltage loop circuit; wiring clearance between high and low voltage should be at the range of 300~500mm or above.
3. The shielded wire of the adapter plate must be grounded firmly.
4. Upon installation of the adapter plate connections, do not use insulation meter (Megger) to check the insulation

3. Installation method

1.Adapter plate structural dimensions

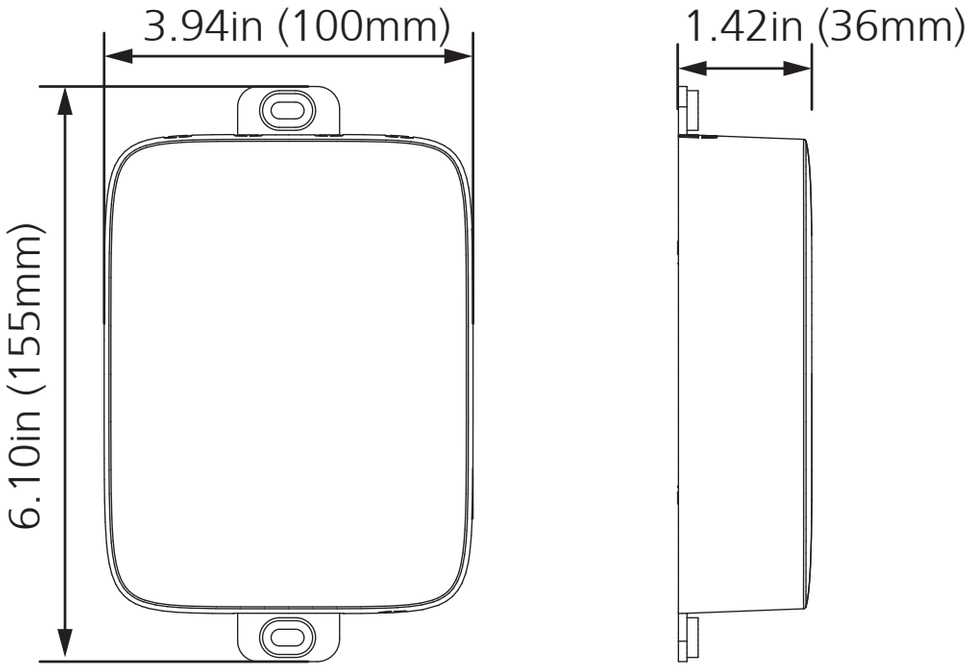

2.Remove the upper part of adapter plate

- Insert a slot screwdriver into the slots in the lower part of the adapter plate (2 places), and remove the upper part of the adapter plate.

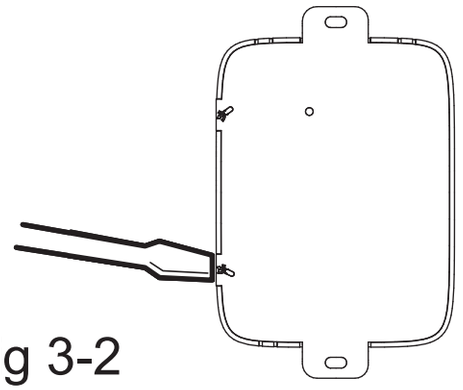

Fig 3-2

NOTE: Do not pry up and down, you can only rotate the screwdriver.

NOTE: The PCB is mounted in the upper part of the adapter plate. Be careful not to damage the board with the slot screwdriver.

3. Fasten the back plate of the adapter plate

- For exposed mounting, fasten the back plate on the wall with the 2 screws (ST3.9*25) and plugs.

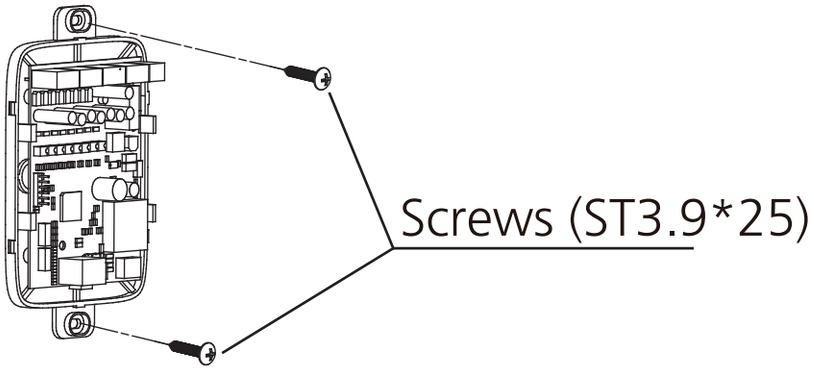

NOTE: Put on a flat surface. Be careful not to distort the back plate of the adapter plate by overtightening the mounting screws.

5. Wire with the indoor unit

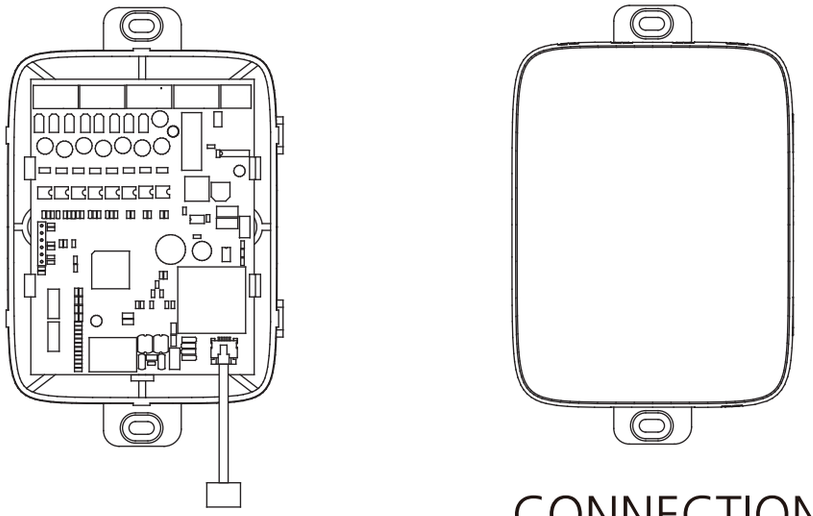

CONNECTION 1#

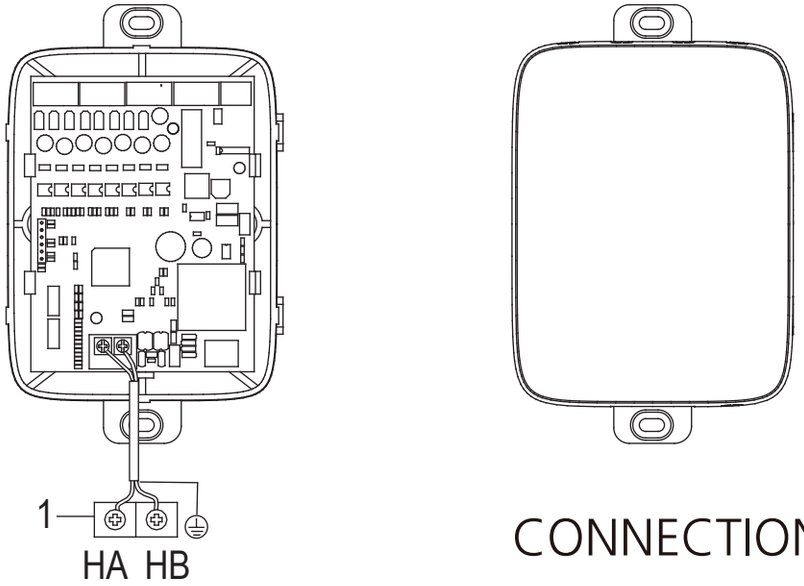

CONNECTION 2#

CONNECTION 1#

Connect the wire from the display panel of the indoor unit to a connecting cable. Then connect the other side of the connecting cable to the remote control.

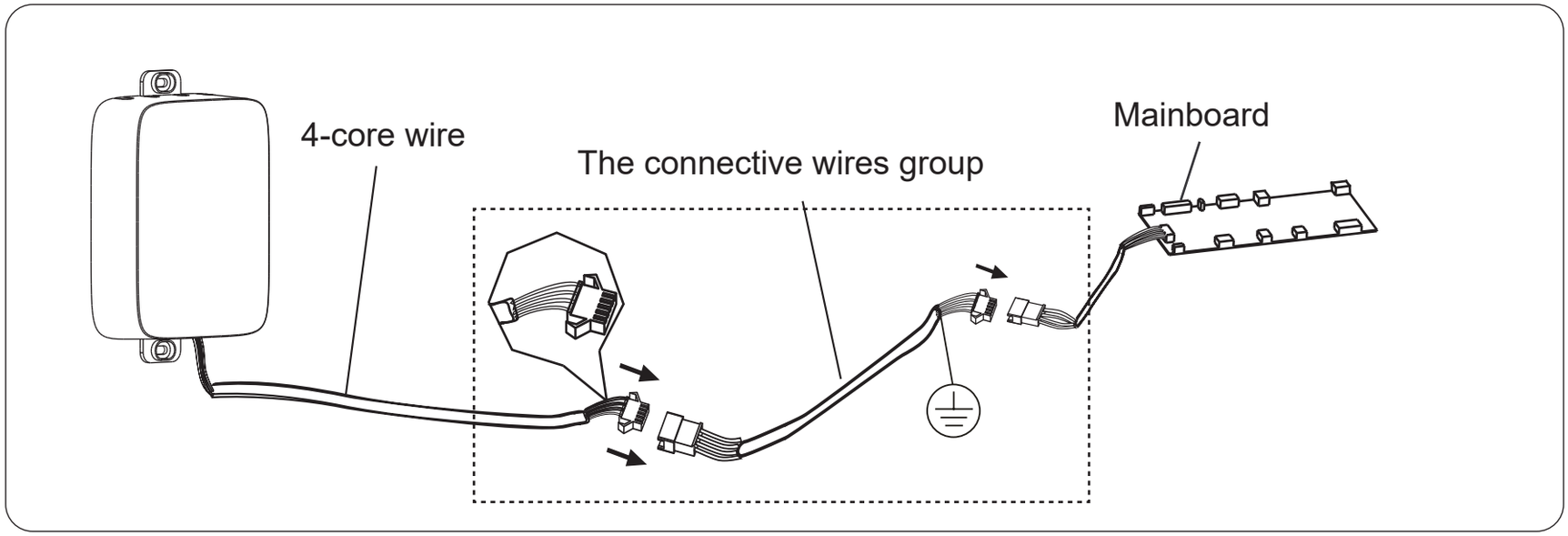

CONNECTION 2#

1 indoor unit

Notch the part for the wiring to pass through with nippers, etc.

Connect the terminals on the adapter plate (HA ,HB), and the terminals of the indoor unit (HA ,HB). (HA and HB do not have polarity.)

NOTE:

- DO NOT allow water to enter the adapter plate. Use tape and putty to seal the wires.
- Connecting wires must be fixed reliably and cannot be pulled.

For some units, the adapter plate connects to the unit HA and HB ports through the HA and HB ports. There is no polarity between HA and HB.

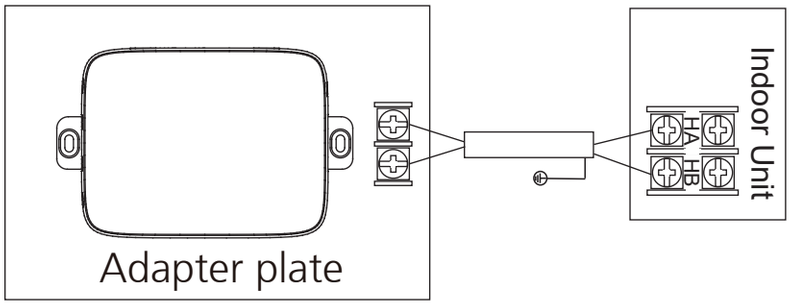

1. When the digital display is turned off, when the 24V small box is used with the internal machine, the internal digital display will be turned off every 5 minutes and 15 seconds, or the digital display will be lit.
2. When the 24V Mini box is connected and used, send it to the air conditioner to set the temperature for the virtual simulation to ensure that the air conditioner can be switched on and off according to the thermostat; When the user turns on the digital display, there will be a difference between the value displayed by the double 8 of the internal unit and the actual temperature value set by the thermostat.
Solution: Use a display sticker to cover the display board of the internal machine and paste it on the panel of the display area.

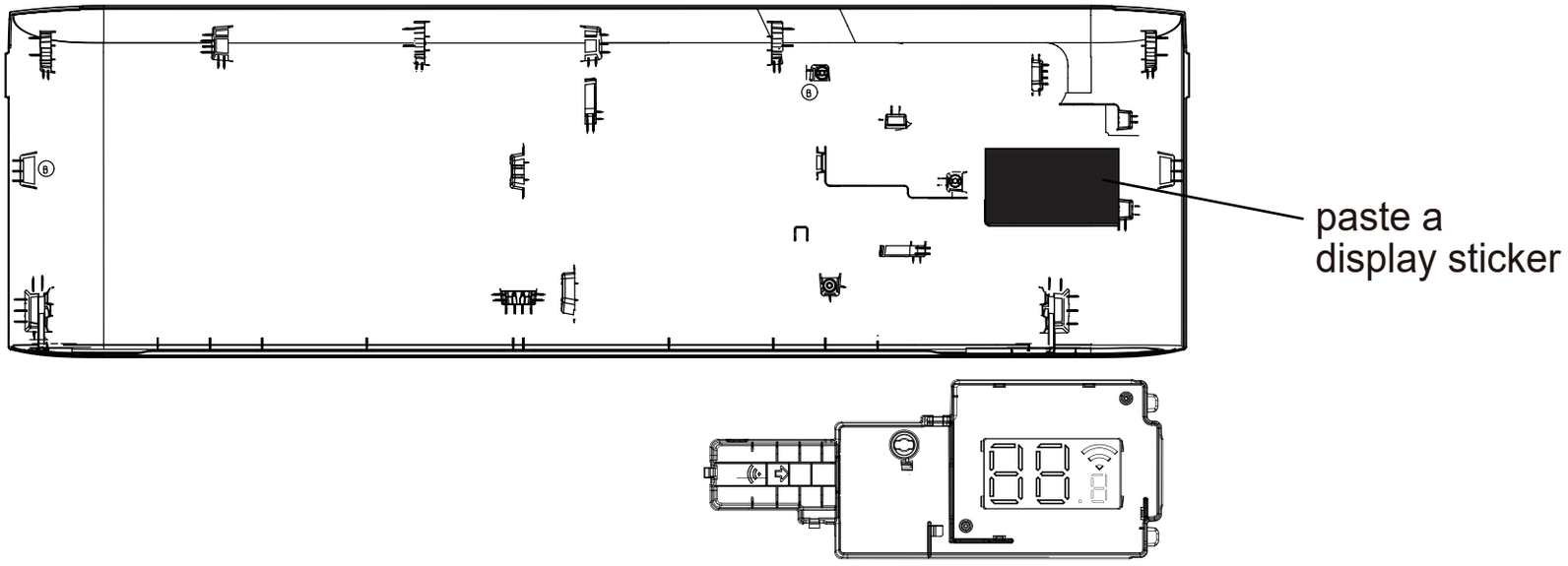

5. Wiring diagram

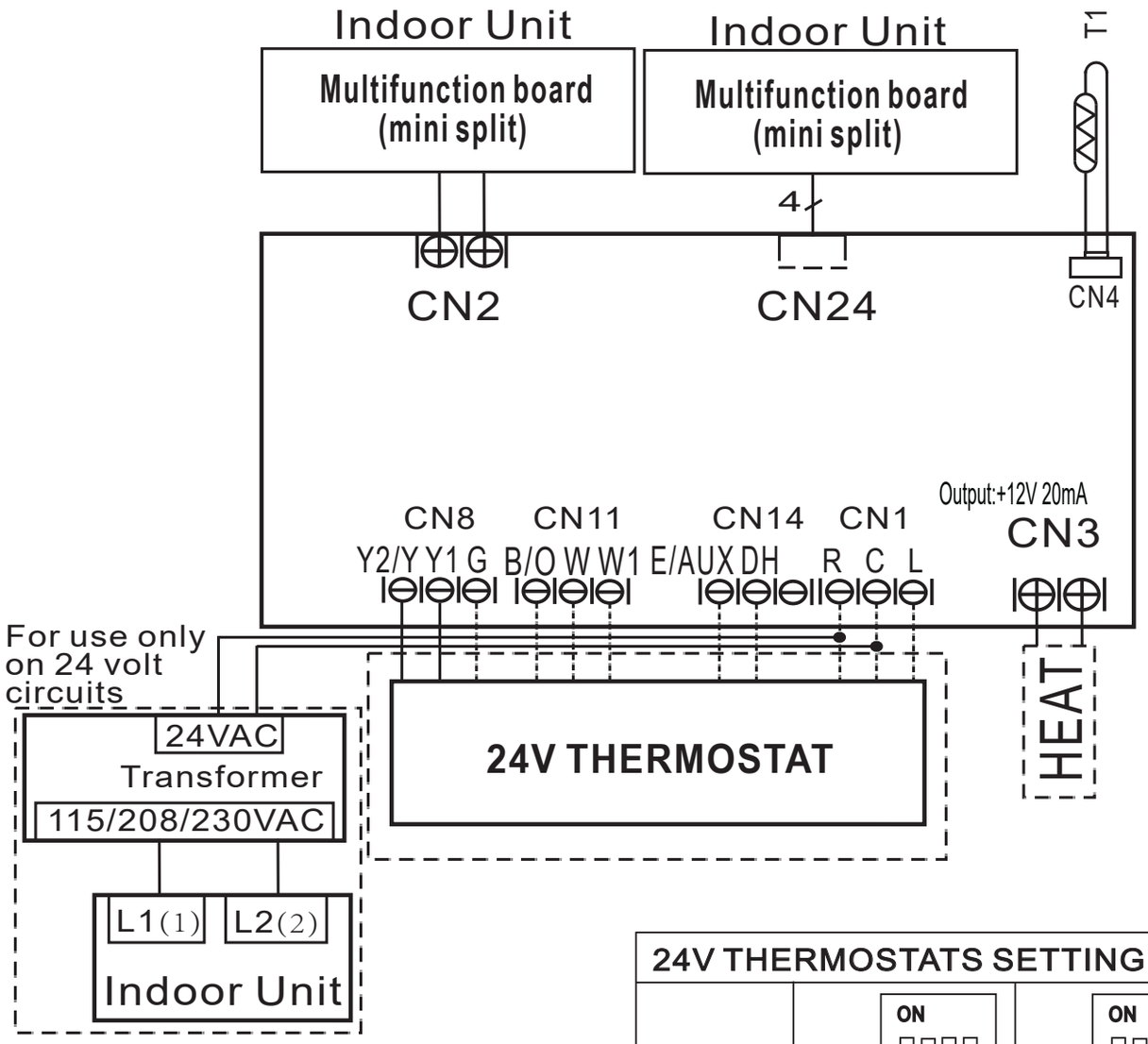

1. [ ] This symbol indicates the element is optional, the actual shape shall prevail.

24V THERMOSTATS SETTING			
	SW1 (ON, 1 2 3 4)	SW2 (ON, 1 2 3 4)	SW3 (ON, 1 2 3 4)
code	ON~OFF	ON~OFF	ON~OFF
factory setting	✓	✓	✓

6. Reattach the upper part of the adapter plate

- After adjusting the upper case and then buckle the upper case, avoid clamping the wiring during installation.

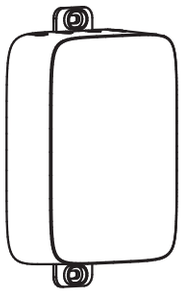

4. Specification

Input voltage	5V~24V
Ambient temperature	-5~43°C(23~110°F)
Ambient humidity	RH40%~RH90%

Wiring specifications

NOTE: Suggested to use the connective wire of 6 meters length.

5.Application

This system is designed for operation with standard 24 vac HVAC thermostats.
Wireless standard configuration HVAC thermostats may be used such as NEST, Ecobee, Honeywell, etc.

NOTICE

The T1 room temperature sensor is placed in the indoor space to detect the ambient temperature of the room.

1.When the user uses the thermostat to control the split air conditioner, the fan of indoor unit may stop running when the thermostat changes from the heating mode, heating & electric heating mode to the air supply mode. This design is to ensure that the Anti-cold Air function of the split air conditioner is still effective after heating to the setting temperature by the thermosat. The fan will stop when the evaporator temperature is low and the fan will not stop when the temperature of the evaporator is high.

2.When the user uses the thermostat to control the multi-split air conditioner and the thermostat mode is changed from the heating mode, heating + electric heating mode to the air mode, the fan of indoor unit may stop running. This is designed to ensure that the thermostat could still normalize the frost after getting to the temperature for heating by the thermosat.

3.When the thermostat to connect this product is used for controlling the air conditioner and when the thermostat

is on, the remote control is only used for the wind swing function of the air conditioner, and the remote control for the air conditioner can not be used for other functions.

Dialling code

Cooling Fan Speed					
Dial Code	1	2	3	4	5
SW1-1	OFF	OFF	OFF	OFF	ON
SW1-2	OFF	OFF	ON	ON	OFF
SW1-3	OFF	ON	OFF	ON	OFF
FUNCTION	Auto Fan (Default)	Low	Middle	High	Turbo

Heating Fan Speed					
Dialling code number	1	2	3	4	5
SW1-4	OFF	OFF	OFF	OFF	ON
SW2-1	OFF	OFF	ON	ON	OFF
SW2-2	OFF	ON	OFF	ON	OFF
FUNCTION	Auto Fan (Default)	Low	Middle	High	Turbo

NO.	Dial Code	FUNCTION	ON	OFF	NOTE
1	SW2-3	Set type selection, multi-split and split models selection	Multi-split	Split	
2	SW2-4	Split selective dialling code 1	See Table 1 for a description of the dialling code options for split model	See Table 1 for a description of the dialling code options for split model	Split AB models and multi-split do not have this function.
4	SW3-2	Prolonged non-temperature time setting	60 minutes	30 minutes	
5	SW3-3	Heat port on/off temperature difference	2F	4F	Split AB models do not have this function.
6	SW3-4	Split selective dialling code 2	See Table 1 for a description of the dialling code options for split model	See Table 1 for a description of the dialling code options for split model	This code is valid only when the SW2-4 dialling code is OFF. Split AB models do not have this function.

Table 1

DIP SWITCH SETTING WITH DIFFERENT COMBINATION				
Combination	SW2-3	SW2-4	SW3-4	NOTE
Indoor unit type 1(GA) + split outdoor unit type 2 (Not GA)	OFF	OFF	OFF	Default
Indoor unit type 1(GA) + split outdoor unit type 1(GA)	OFF	ON	*	
Indoor unit type 2 (Not GA) + split z outdoor unit type 1(GA) or Indoor unit type 2 (Not GA) +split outdoor unit type 2 (Not GA)	OFF	OFF	ON	

Indoor unit type 1(GA) +multi-split outdoor unit	ON	*	OFF	
Indoor unit type 2(Not GA) + multi-split outdoor unit	ON	*	ON	
Note: Indoor unit type and outdoor unit type are queried according to the model code.				

Interface Input Description

Connector	Purpose
G	Fan Control
Y1	1st stage compressor
Y2/Y	2nd stage compressor or 1 stage only thermostat
B/O	Reversing valve
W	Heating control
W1	Electric Heating
E/AUX	Emergency Heating
DH	Dehumidification
L	Malfunction signal
R	24V Power Connection
C	Common

1、When you use the thermostat to control the air conditioner, the dehumidification mode is not supported.
2、For does not support model of electric heat auxiliary separate open, when emergency heating, electric heating thermostat input this product according to the heating mode control air conditioning, for no charge for auxiliary heat module model, when the thermostat input Heating + auxiliary electric heating mode, emergency electric auxiliary heating mode and single electric heating model the product control air conditioning heating mode.

24V SIGNAL CHART

24V input terminal											
Mode	Priority	G	Y1	Y2	B/O	W	W1	E/AUX	DH	Fan speed	NOTE
OFF	/	0	0	0	0	0	0	0	*	OFF	
FAN	6	1	0	0	*	0	0	0	*	Low	NOTE 1
Cooling stage 1	5	*	1	0	0	0	0	0	*	Dialling code Fan Speed	
Cooling stage 2		*	*	1	0	0	0	0	*	Dialling code Fan Speed	

Heat pump stage 1	4	*	1	0	1	0	0	0	*	Dialling code Fan Speed	
Heat pump stage 2		*	*	1	1	0	0	0	*	Dialling code Fan Speed	
Heat pump stage 2		*	*	*	*	1	0	0	*	Dialling code Fan Speed	
Electric heater kit 1	2	*	0	0	*	0	1	0	*	Turbo	NOTE 2
Heat pump stage 1 + Electric heater kit 1	3	*	1	0	1	0	1	0	*	Turbo	NOTE 3
Heat pump stage 2 + Electric heater kit 1		*	*	1	1	0	1	0	*	Turbo	NOTE 3
Heat pump stage 2 + Electric heater kit 1		*	*	*	*	1	1	0	*	Turbo	NOTE 3
Emergency heat	1	*	*	*	*	*	*	1	*	Turbo	NOTE 2

NOTE 1: 1. (a) For a multizone indoor unit, when the heating mode is transferred to the fan mode, the fan of indoor unit will stop running.
(b) For a single zone indoor unit, when the heating mode is transferred to the fan mode, the anti-cold-air function is effective.
(c) When the OFF mode or cooling mode are transferred to the fan mode, the fan of indoor unit will run in low speed.
NOTE 2: When the indoor unit does not support auxiliary heating only mode, the indoor unit operates in heating mode.
NOTE 3: When the indoor unit does not have the electric auxiliary heating function, the indoor unit operates in heating mode.

The design and specifications are subject to change without prior notice for product improvement.Consult with the sales agency or manufacturer for details.