innovair®

INVERTER™

SLIM4

User Manual

Indoor Unit

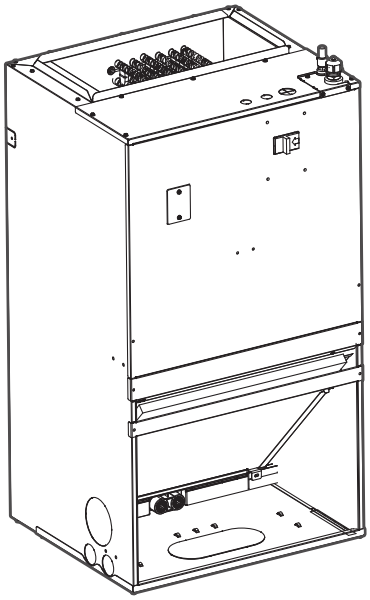

Split System Cooling Only & Heat Pump
Up to 19 SEER2
Heat Pump 1.5 - 3 Tons
R454B

SWV Series

NOTE: Appearance of unit may vary.

AHRI CERTIFIED®
www.ahridirectory.org
Unitary Small HP
AHRI Standard 210/240
Certification applies only When the complete system is listed with AHRI.

Intertek

ALL phases of this installation must comply with NATIONAL, STATE AND LOCAL CODES

IMPORTANT — This Document is customer property and is to remain with this unit. Please return to service information pack upon completion of work.

These instructions do not cover all variations in systems or provide for every possible contingency to be met in connection with the installation. Should further information be desired or should particular problems arise which are not covered sufficiently for the purchaser's purposes, the matter should be referred to your installing dealer or local distributor.

Note : *The manufacturer recommends installing only approved matched indoor and outdoor systems. All of the manufacturer's split systems are A.H.R.I. rated only with TXV indoor systems. Some of the benefits of installing approved matched indoor and outdoor split systems are maximum efficiency, optimum performance and the best overall system reliability.*

©2024 Innovair Solutions. All Rights Reserved.

NOMENCLACTURE

S	W	V	36	B	D	A
1	2	3	4	5	6	7

Series

S	SLIM4

Unit Type

W	Font Return Wall Mount

Feature

V	Variable Speed

Nominal Capacity

18	18K BTU
24	24K BTU
30	30K BTU
36	36K BTU

Version

Electrical

D	Dual Voltage 115V & 208/230V, 1PH, 60Hz
2	208/230V, 1PH, 60Hz

Refrigerant

B	R454B
X	R32

FOR UP TO DATE INFORMATION SUCH AS SPECIFICATIONS, CATALOGS, AND BULLETINS, PLEASE SCAN BELOW OR VISIT INNOVAIR.COM

©2024 Innovair Solutions. All Rights Reserved.

TABLE OF CONTENTS

SAFETY PRECAUTIONS 02
1 ACCESSORIES 17
2 INDOOR UNIT INSTALLATION 18
2.1 Select the installation location of indoor units 18
2.2 Unit dimensions 19
2.3 Air filter（not factory-installed）dimensions 20
2.4 Air handler mounting option 21
2.5 Ductwork 27
2.6 Connecting the wire and pipes （pipes and drainage pipes） 30
2.7 Refrigerant piping connection 30
2.8 Leak Dissipation System 34
2.9 Installation of electric auxiliary heat module 35
3 WIRING PRECAUTIONS 39
4 AIR EVACUATION 51
5 TEST RUN 53

Read this manual

Inside you'll find many helpful hints on how to use and maintain your air conditioner properly. Just a little preventive care on your part can save you a great deal of time and money over the life of your air conditioner. These instructions may not cover every possible condition of use, so common sense and attention to safety is required when installing, operating and maintaining this product.

SAFETY PRECAUTIONS

It is really important you read Safety Precautions Before Operation and Installation Incorrect installation due to ignoring instructions can cause serious damage or injury. The seriousness of potential damage or injuries is classified as either a WARNING or CAUTION.

Explanation of Symbols

WARNING

This symbol indicates the possibility of personal injury or loss of life.

CAUTION

This symbol indicates the possibility of property damage or serious consequences.

⚠ WARNING

This appliance is not intended for use by persons(including children) with reduced physical, sensory or mental capabilities, or lack of experience and knowledge, unless they have been given supervision or instruction concerning use of the appliance by a person responsible for their safety. Children should be supervised to ensure that they do not play with the appliance.

⚠ ELECTRICAL WARNINGS

- Only use the specified wire. If the wire is damaged, it must be replaced by the manufacturer, its service agent or similarly qualified persons in order to avoid a hazard.
- The product must be properly grounded at the time of installation, or electrical shock may occur.
- Installation Manual. Connect cables tightly, and clamp them securely to prevent external forces from damaging the terminal. Improper electrical connections can overheat and cause fire, and may also cause shock. All electrical connections must be made according to the Electrical Connection Diagram located on the panels of the indoor and outdoor units.
- All wiring must be properly arranged to ensure that the control board cover can close properly. If the control board cover is not closed properly, it can lead to corrosion and cause the connection points on the terminal to heat up, catch fire, or cause electrical shock.
- Disconnection must be incorporated in the fixed wiring in accordance with the wiring rules.
  Do not share the electrical outlet with other appliances. Improper or insufficient power supply can cause fire or electric shock.
- If connecting power to fixed wiring, an all-pole disconnection device which has at least 3mm clearances in all poles, and have a leakage current that may exceed 10mA, the residual current device(RCD) having a rated residual operating current not exceeding 30mA, and disconnection must be incorporated in the fixed wiring in accordance with the wiring rules.
- If the SUPPLY CORD damaged, it must be replaced by the manufacturer, its service agent or similarly qualified persons in order to avoid a hazard.

⚠ WARNINGS FOR PRODUCT INSTALLATION

- Turn off the air conditioner and disconnect the power before performing any installation or repairing. Failure to do so can cause electric shock.
- Installation must be performed by an authorized dealer or specialist. Defective installation can cause water leakage, electrical shock, or fire.
- Installation must be performed according to the installation instructions. Improper installation can cause water leakage, electrical shock, or fire.
- Check the electric wire, water and gas pipeline layout inside the wall, floor and ceiling before installation. Do not implement drilling unless confirm safety with the user, especially for the hidden power wire. An electroprobe can be used to test whether a wire is passing by at the drilling location, to prevent physical injury or death caused by insulation broken cords.

- Check the power supply before installation. Ensure that the power supply must be reliably grounded following local, state and National Electrical Codes. If not, for example, if the ground wire is detected charged, installation is prohibited before it is rectified. Otherwise, there is a risk of fire and electric shock, causing physical injury or death.
- Contact an authorized service provider for repair or maintenance of this unit. This appliance shall be installed in accordance with national wiring regulations.
- Only use the included accessories, parts, and specified parts for installation. Using non-standard parts can cause water leakage, electrical shock, fire, and can cause the unit to fail.
- Install the unit in a firm location that can support the unit's weight. If the chosen location cannot support the unit's weight, or the installation is not done properly, the unit may fall and cause serious injury and damage.
- The first 36 inches of supply air plenum and ductwork must be constructed of sheet metal as required by NFPA 90B. The supply air plenum or duct must have a solid sheet metal bottom directly under the unit with no openings, registers or flexible air ducts located in it. If flexible supply air ducts are used they may be located only in the vertical walls of rectangular plenum, a minimum of 6 inches from the solid bottom. Metal plenum of duct may be connected to the combustible floor base, if not, it must be connected to the unit supply duct exposed to the supply air opening from the downflow unit. Exposing combustible (non-metal) material to the supply opening of a downflow unit can cause a fire resulting in property damage, personal injury or death.

  Exception warning to downflow:

  Installations on concrete floor slab with supply air plenum and ductwork completely encased must be not less than 2 inches of concrete (See NFPA 90A). When using the unit with electrical heater, the switch is used only for electrical heater on the front of panel.
- Install drainage piping according to the instructions in this manual. Improper drainage may cause water damage to your home and property.
- Install drainage piping according to the instructions in this manual. Improper drainage may cause water damage to your home and property.
- For units that have an auxiliary electric heater, do not install the unit within 1 meter (3 feet) of any combustible materials.
- **Do not** install the unit in a location that may be exposed to combustible gas leaks. If combustible gas accumulates around the unit, it may cause fire.
- **Do not** turn on the power until all work has been completed.
- When moving or relocating the air conditioner, consult experienced service technicians for disconnection and reinstallation of the unit.
- How to install the appliance to its support, please read the information for details in "indoor unit installation" and "outdoor unit installation" sections .

TAKE NOTE OF FUSE SPECIFICATIONS

The air conditioner's circuit board (PCB) is designed with a fuse to provide overcurrent protection. The specifications of the fuse are printed on the circuit board , for example : T3.15AL/250VAC, T5AL/250VAC, T3.15A/250VAC, T5A/250VAC, T20A/250VAC, T30A/250VAC,etc.
NOTE: Only the blast-proof ceramic fuse can be used.

⚠ WARNINGS FOR CLEANING AND MAINTENANCE

- Turn off the device and disconnect the power before cleaning. Failure to do so can cause electrical shock.
- **Do not** clean the air conditioner with excessive amounts of water.
- **Do not** clean the air conditioner with combustible cleaning agents. Combustible cleaning agents can cause fire or deformation.

⚠ WARNING FOR USING FLAMMABLE REFRIGERANT

1. Installation (Space)
   - That the installation of pipe-work shall be kept to a minimum.
   - That pipe-work shall be protected from physical damage.
   - Where refrigerant pipes shall be compliance with national gas regulations.
   - That mechanical connections shall be accessible for maintenance purposes.
   - In cases that require mechanical ventilation, ventilation openings shall be kept clear of obstruction.
   - When disposing of the product is used, be based on national regulations, properly processed.
2. Servicing
   - Any person who is involved with working on or breaking into a refrigerant circuit should hold a current valid certificate from an industry-accredited assessment authority, which authorises their competence to handle refrigerants safely in accordance with an industry recognized assessment specification.
3. Maintenance and repair requiring the assistance of other skilled personnel shall be carried out under the supervision of the person competent in the use of flammable refrigerants.
4. Do not use any means to accelerate the defrosting process or to clean, other than those recommended by the manufacturer.
5. The appliance shall be stored in a room without continuously operating ignition sources (for example: open flames, an operating gas appliance or an operating electric heater).
6. Be more careful that foreign matter(oil, water,etc) does not enter the piping. Also, when storing the piping, securely seal the opening by pinching, taping, etc.
7. Do not pierce or burn.
8. Be aware that refrigerants may not contain an odor.
9. All working procedure that affects safety means shall only be carried by competent persons.
10. Appliance shall be stored in a well ventilated area where the room size corresponds to the room area as specifiec for operation.
11. The appliance shall be stored so as to prevent mechanical damage from occurring.
12. Joints shall be tested with detection equipment with a capability of 5 g/year of refrigerant or better, with the equipment in standstill and under operation or under a pressure of at least these standstill or operation conditions after installation. Detachable joints shall NOT be used in the indoor side of the unit (brazed, welded joint could be used).

NOTE ABOUT FUSE SPECIFICATIONS

- The air conditioner's circuit board (PCB) may be designed with a fuse to provide overcurrent protection. This fuse must be replaces with identical component.
- The specifications of the fuse, if equipped, are printed on the circuit board, examples of such are T5A/250VAC and T10A/250VAC.

NOTE ABOUT REFRIGERANT

- Installation, service, maintenance and repair of this unit must be performed by a certified technician.
- Product uninstallation and recycling must be performed by a certified technician.
- When the unit is checked for leaks, proper record-keeping of all checks is strongly recommended.

The allowed static pressure range of the air conditioner on site is 0-0.80 in-H2O (0-200 Pa). The data below represents the static pressures at full required air flow used for AHRI testing.

MODEL	18-24K	30-36K
PRESSURE	0.30in-H2O(75Pa)	0.30in-H2O(75Pa)

STATIC PRESSURE	⩽200Pa/0.8in-H2O	＞200Pa/0.8in-H2O
THE STATIC PRESSURE ALLOWED BY THE PRODUCT	OK	NG

NOTE

The maximum functional total external static pressure can not exceed 0.80 in WC or 200 Pa. The airflow reduces significantly beyond 0.80 in WC or 200Pa. System design should allow for the increased resistance of filters as they become dirty.

Room size restriction

The appliances are connected via an air duct system to one or more rooms, the bottom of the air outlet of the air duct in the room should be at a height ⩾7.3ft/2.2m from the floor. In UL/CSA 60335-2-40, the R454B refrigerant belongs to mildly flammable refrigerants, which will limit the room area of the system service. Similarly, the total amount of refriger ant in the system should be less than or equal to the maximum allowable refrigerant charge, which depends on the room area serviced by the system.

NOTE

The nouns in this section are explained as follows :
Mc: The actual refrigerant charge in the system.
A: the actual room area where the appliance is installed.
Amin: The required minimum room area.
Mmax: The allowable maximum refrigerant charge in a room.
Qmin: The minimum circulation airllow.
Anvmin The minimum opening area for connected rooms.
TAmin: The total area of the conditioned space (For appliances serving one or more rooms with an air dut system).
TA: The total area of the conditioned space connected by air ducts.

Refrigerant charge and room area limitations

For the purpose of determination of room area (A) when used to calculate the maximum allowable refrigerant charge (mmax) in an unventilated space, the following shall apply.
The room area (A) shall be defined as the room area enclosed by the projection to the floor of the walls, partitions and doors of the space in which the appliance is installed.
Spaces connected by only drop ceilings, ductwork, or similar connections shall not be considered a single space.
For units mounted higher than 6.0ft/1.8m, spaces divided by partition walls which are no higher than 5.3ft/1.6m shall be considered a single space.
For fixed appliances, rooms on the same floor and connected by an open passageway between the spaces can be considered a single room when determining compliance to Amin, if the passageway complies with all of the following.

• It is a permanent opening.
• It extends to the floor.
• It is intended for people to walk through.

For fixed appliances, the area of the adjacent rooms, on the same floor, connected by permanent opening in the walls and/or doors between occupied spaces, including gaps between the wall and the floor, can be considered a single room when determining compliance to Amin, provided all of the following are met.
• The space shall have appropriate openings according to Sec.2.
• The minimum opening area for natural ventilation Anvmin shall not be less than the following:

Height of outlet/m	A/m²	Mc/kg	Mmax/kg	Anvmin/m²
2.2	5	5.0	2.685	0.045
2.2	6	5.0	2.941	0.042
2.2	7	5.0	3.177	0.038
2.2	8	5.0	3.396	0.035
2.2	9	5.0	3.602	0.031
2.2	10	5.0	3.797	0.028
2.2	11	5.0	3.983	0.024
2.2	12	5.0	4.160	0.020
2.2	13	5.0	4.330	0.016
2.2	14	5.0	4.493	0.013
2.2	15	5.0	4.651	0.009
2.2	16	5.0	4.803	0.005
2.2	17	5.0	4.951	0.001

Note: Take the Mc =5.0kg as an example. For appliances serving one or more rooms with an air duct system, the room area calculation shall be determined based on the total area of the conditioned space (TA) connected by ducts taking into consideration that the circulating airflow distributed to all the rooms by the appliance integral indoor fan will mix and dilute the leaking refrigerant before entering any room.

Opening conditions for connected rooms

When the openings for connected rooms are required, the following conditions shall be applied.

• The area of any openings above 300mm from the floor shall not be considered in determining compliance with Anvmin.

• At least 50% of the required opening area Anvmin shall be below 200mm from the floor.

• The bottom of the lowest openings shall not be higher than the point of release when the unit is installed and not more than 100mm from the floor.

• Openings are permanent openings which cannot be closed.

– For openings extending to the floor the height shall not be less than 20mm above the surface of the floor covering

• A second higher opening shall be provided. The total size of the second opening shall not be less than 50% of minimum opening area for Anvmin and shall be at least 1.5 m above the floor.

NOTE: The requirement for the second opening can be met by drop ceilings, ventilation ducts, or similar arrangements that provide an airflow path between the connected rooms.

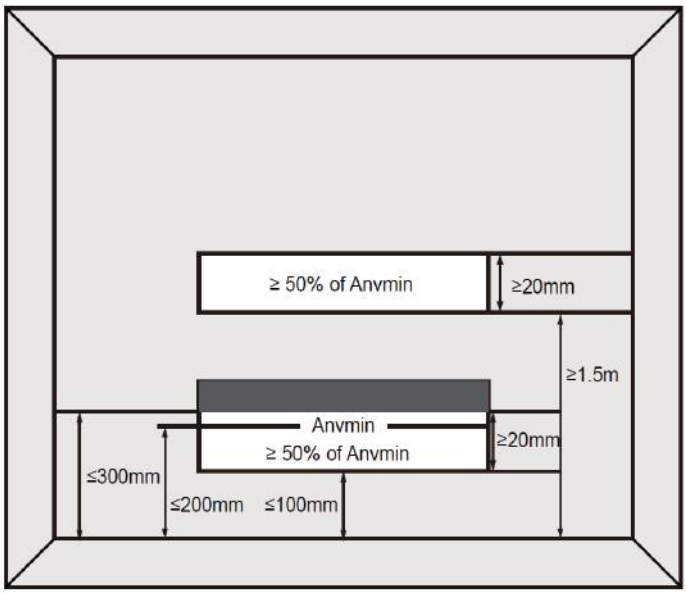

• The room into which refrigerant can leak, plus the connected adjacent room(s) shall have a total area of not less than TAmin.

• The room area in which the unit is installed shall be not less than 20 %TAmin.

For R454B refrigerant charge amount and minimum room area:

The machine you purchased may be one of the types in the table below. The indoor and outdoor units are designed to be used together. Please check the machine you purchased.The minimum room area of operating or storage should be as specified in the following table:

Regular Heat Series

Model	Indoor unit	Outdoor unit
18K(208/230V)	SWV18BDA	SOV18H2BA
24K(208/230V)	SWV24BDA	SOV24H2BA
30K(208/230V)	SWV30BDA	SOV30H2BA
36K(208/230V)	SWV36BDA	SOV36H2BA

Hyper Heat Series

Model	Indoor unit	Outdoor unit
18K(208/230V)	SWV18BDA	SHV18H2BA
24K(208/230V)	SWV24BDA	SHV24H2BA
30K(208/230V)	SWV30BDA	SHV30H2BA
36K(208/230V)	SWV36BDA	SHV36H2BA

M_c or M_{REL} [oz/kg]	TA_{min} [ft²/m²]	M_c or M_{REL} [oz/kg]	TA_{min} [ft²/m²]	M_c or M_{REL} [oz/kg]	TA_{min} [ft²/m²]	M_c or M_{REL} [oz/kg]	TA_{min} [ft²/m²]
<=62.7/1.776	12/1.1	134/3.8	126/11.67	211.6/6.0	198/18.43	289.2/8.2	271/25.18
63.5/1.8	60/5.53	141.1/4	132/12.29	218.7/6.2	205/19.04	296.3/8.4	278/25.8
70.5/2	66/6.14	148.1/4.2	139/12.9	225.8/6.4	212/19.66	303.4/8.6	284/26.41
77.6/2.2	73/6.76	155.2/4.4	145/13.51	232.8/6.6	218/20.27	310.4/8.8	291/27.63
84.6/2.4	79/7.37	162.2/4.6	152/14.13	239.9/6.8	225/20.88	317.5/9.0	298/27.64
91.7/2.6	86/7.99	169.3/4.8	159/14.74	246.9/7.0	231/21.5	324.5/9.2	304/28.26
98.8/2.8	93/8.6	176.4/5	165/15.36	254/7.2	238/22.11	331.6/9.4	311/28.87
105.8/3	99/9.21	183.4/5.2	172/15.97	261/7.4	245/22.73	338.6/9.6	317/29.48
112.9/3.2	106/9.83	190.5/5.4	179/16.58	268.1/7.6	251/23.34	345.7/9.8	324/30.10
119.9/3.4	112/10.44	197.5/5.6	185/17.2	275.1/7.8	258/23.96	352.7/10.0	331/30.71
127/3.6	119/11.06	204.6/5.8	192/17.81	282.2/8.0	264/24.57		

Area formula	**TA_{min}** is the required minimum room area in ft²/m² **M_c** is the actual refrigerant charge in the system in oz/kg **M_{REL}** is the refrigerant releaseable charge in oz/kg **h_{inst}** is the height of the bottom of the appliance relative to the floor of the room after installation. **WARNING:** The minimum room area or minimum room area of conditioned space is based on releasable charge and total system refrigerant charge.

When the unit detects a refrigerant leak, the minimum airflow of the indoor unit is as follows:

Model	18K	24K	30K	36K
Nominal air volume	400CFM (680m³/h)	400CFM (680m³/h)	447CFM (760m³/h)	541CFM (920m³/h)

1. **Installation**(where refrigerant pipes are allowed)
   - Any person who is involved with working on or breaking into a refrigerant circuit should hold a current valid certificate from an industry-accredited assessment authority, which authorizes their competence to handle refrigerants safely in accordance with an industry recognized assessment specification.
   - Maintenance and repair requiring the assistance of other skilled personnel shall be carried out under the supervision of the person competent in the use of flammable refrigerants.
   - That the installation of pipe-work shall be kept to a minimum.
   - That pipe-work shall be protected from physical damage.
   - Where refrigerant pipes shall be compliance with national gas regulations.
   - That mechanical connections shall be accessible for maintenance purposes.
   - Be more careful that foreign matter(oil, water,etc) does not enter the piping. Also, when storing the piping, securely seal the opening by pinching, taping, etc.
   - All working procedure that affects safety means shall only be carried by competent persons.
   - Appliance shall be stored in a well ventilated area where the room size corresponds to the room area as specified for operation.
   - Joints shall be tested with detection equipment with a capability of 5 g/year of refrigerant or better, with the equipment in standstill and under operation or under a pressure of at least these standstill or operation conditions after installation. Detachable joints shall NOT be used in the indoor side of the unit (brazed, welded joint could be used).
   - In cases that require mechanical ventilation, ventilation openings shall be kept clear of obstruction.
   - LEAK DETECTION SYSTEM installed. Unit must be powered except for service. For the unit with refrigerant sensor, when the refrigerant sensor detects refrigerant leakage, the indoor unit will display a error code and emit a buzzing sound, the compressor of outdoor unit will immediately stop, and the indoor fan will start running. The service life of the refrigerant sensor is 15 years. When the refrigerant sensor malfunctions, the indoor unit will display the error code “FHCC”. The refrigerant sensor can not be repaired and can only be replaced by the manufacturer. It shall only be replaced with the sensor specified by the manufacturer.

2. **When a FLAMMABLE REFRIGERANT is used,** the requirements for installation space of appliance and/or ventilation requirements are determined according to
   - the mass charge amount(M) used in the appliance,
   - the installation location,
   - the type of ventilation of the location or of the appliance.
   - piping material, pipe routing, and installation shall include protection from physical damage in operation and service, and be in compliance with national and local codes and standards, such as ASHRAE 15, IAPMO Uniform Mechanical Code, ICC International Mechanical Code, or CSA B52. All field joints shall be accessible for inspection prior to being covered or enclosed.
   - that protection devices, piping, and fittings shall be protected as far as possible against adverse environmental effects, for example, the danger of water collecting and freezing in relief pipes or the accumulation of dirt and debris;
   - that piping in refrigeration systems shall be so designed and installed to minimize the likelihood of hydraulic shock damaging the system;
   - that steel pipes and components shall be protected against corrosion with a rustproof coating before applying any insulation;
   - that precautions shall be taken to avoid excessive vibration or pulsation;
   - the minimum floor area of the room shall be mentioned in the form of a table or a single figure without reference to a formula;
   - after completion of field piping for split systems, the field pipework shall be pressure tested with an inert gas and then vacuum tested prior to refrigerant charging, according to the following requirements:

a. The minimum test pressure for the low side of the system shall be the low side design pressure and the minimum test pressure for the high side of the system shall be the high side design pressure, unless the high side of the system can not be isolated from the low side of the system in which case the entire system shall be pressure tested to the low side design pressure.
b. The test pressure after removal of pressure source shall be maintained for at least 1 h with no decrease of pressure indicated by the test gauge, with test gauge resolution not exceeding 5% of the test pressure.
c. During the evacuation test, after achieving a vacuum level specified in the manual or less, the refrigeration system shall be isolated from the vacuum pump and the pressure shall not rise above 1500 microns within 10 min. The vacuum pressure level shall be specified in the manual, and shall be the lessor of 500 microns or the value required for compliance with national and local codes and standards, which may vary between residential, commercial,and industrial buildings.

- field-made refrigerant joints indoors shall be tightness tested according to the following requirements: The test method shall have a sensitivity of 5 grams per year of refrigerant or better under a pressure of at least 0.25 times the maximum allowable pressure. No leak shall be detected.

3 . Qualification of workers

Any maintenance, service and repair operations must be required qualification of the working personnel. Every working procedure that affects safety means shall only be carried out by competent persons that joined the training and achieved competence should be documented by a certificate. The training of these procedures is carried out by national training organizations or manufacturers that are accredited to teach the relevant national competency standards that may be set in legislation. All training shall follow the ANNEX HH requirements of UL 60335-2-40 4th Edition.

Examples for such working procedures are:

• breaking into the refrigerating circuit;
• opening of sealed components;
• opening of ventilated enclosures.

4. Checks to the area

Prior to beginning work on systems containing flammable refrigerants, safety checks are necessary to ensure that the risk of ignition is minimised. For repair to the refrigerating system, the following precautions shall be complied with prior to conducting work on the system.

5. Work procedure

Works shall be undertaken under a controlled procedure so as to minimise the risk of a flammable gas or vapour being present while the work is being performed.

6. General work area

All maintenance staff and others working in the local area shall be instructed on the nature of work being carried out. work in confined spaces shall be avoided.

7. Checking for presence of refrigerant

The area shall be checked with an appropriate refrigerant detector prior to and during work, to ensure the technician is aware of potentially flammable atmospheres. Ensure that the leak detection equipment being used is suitable for use with flammable refrigerants, i.e. no sparking, adequately sealed or intrinsically safe.

8. Presence of fire extinguisher

If any hot work is to be conducted on the refrigeration equipment or any associated parts, appropriate fire extinguishing equipment shall be available to hand. Have a dry power or CO2 fire extinguisher adjacent to the charging area.

9. No ignition sources
No person carrying out work in relation to a REFRIGERATING SYSTEM which involves exposing any pipe work shall use any sources of ignition in such a manner that it may lead to the risk of fire or explosion. All possible ignition sources, including cigarette smoking, should be kept sufficiently far away from the site of installation, repairing, removing and disposal, during which refrigerant can possibly be released to the surrounding space. Prior to work taking place, the area around the equipment is to be surveyed to make sure that there are no flammable hazards or ignition risks. “No Smoking” signs shall be displayed.

10. Ventilated area
Ensure that the area is in the open or that it it adequately ventilated before breaking into the system or conducting any hot work. A degree of ventilation shall continue during the period that the work is carried out. The ventilation should safely disperse any released refrigerant and preferably expel it externally into the atmosphere.

11. Checks to the refrigeration equipment
Where electrical components are being changed, they shall be fit for the purpose and to the correct specification. At all times the manufacturer’s maintenance and service guidelines shall be followed. If in doubt consult the manufacturer’s technical department for assistance. The following checks shall be applied to installations using FLAMMABLE REFRIGERANTS:

- the actual refrigerant charge is in accordance with the room size within which the refrigerant containing parts are installed;
- the ventilation machinery and outlets are operating adequately and are not obstructed;
- if an indirect refrigerating circuit is being used, the secondary circuits shall be checked for the presence of refrigerant;
- marking to the equipment continues to be visible and legible, marking and signs that are illegible shall be corrected;
- refrigeration pipe or components are installed in a position where they are unlikely to be exposed to any substance which may corrode refrigerant containing components, unless the components are constructed of materials which are inherently resistant to being corroded or are suitably protected against being so corroded.

12. Checks to electrical devices
Repair and maintenance to electrical components shall include initial safety checks and component inspection procedures. If a fault exists that could compromise safety, then no electrical supply shall be connected to the circuit until it is satisfactorily dealt with. If the fault cannot be corrected immediately but it is necessary to continue operation, and adequate temporary solution shall be used. This shall be reported to the owner of the equipment so all parties are advised.
Initial safety checks shall include:
that capacitors are discharged: this shall be done in a safe manner to avoid possibility of sparking;
that there no live electrical components and wiring are exposed while charging, recovering or purging the system;
that there is continuity of earth bonding;
Sealed electrical components shall be replaced if it's damage;
Intrinsically safe components must be replaced if it's damage.

13. Wiring
Check that wiring will not be subject to wear, corrosion, excessive pressure, vibration, sharp edges or any other adverse environmental effects. The check shall also take into account the effects of aging or continual vibration from sources such as compressors or fans.

14. Detection of flammable refrigerants

Under no circumstances shall potential sources of ignition be used in the searching for or detection of refrigerant leaks. A halide torch(or any other detector using a naked flame) shall not be used.

The following leak detection methods are deemed acceptable for refrigerant systems. Electronic leak detectors may be used to detect refrigerant leaks but, in the case of FLAMMABLE REFRIGERANTS, the sensitivity may not be adequate, or may need re-calibration. (Detection equipment shall be calibrated in a refrigerant-free area.) Ensure that the detector is not a potential source of ignition and is suitable for the refrigerant used. Leak detection equipment shall be set at a percentage of the LFL of the refrigerant and shall be calibrated to the refrigerant employed, and the appropriate percentage of gas (25 % maximum) is confirmed. Leak detection fluids are also suitable for use with most refrigerants but the use of detergents containing chlorine shall be avoided as the chlorine may react with the refrigerant and corrode the copper pipe-work.

NOTE Examples of leak detection fluids are

- bubble method.

If a leak is suspected, all naked flames shall be removed/extinguished.

If a leakage of refrigerant is found which requires brazing, all of the refrigerant shall be recovered from the system, or isolated (by means of shut off valves) in a part of the system remote from the leak. See the following instructions of removal of refrigerant.

15. Removal and evacuation

When breaking into the refrigerant circuit to make repairs - or for any other purpose conventional procedures shall be used. However, for flammable refrigerants it is important that best practice be followed, since flammability is a consideration.

The following procedure shall be adhered to:

- safely remove refrigerant following local and national regulations;
- evacuate;
- purge the circuit with inert gas (optional for A2L);
- evacuate (optional for A2L);
- continuously flush or purge with inert gas when using flame to open circuit; and
- open the circuit.

The refrigerant charge shall be recovered into the correct recovery cylinders if venting is not allowed by local and national codes. For appliances containing flammable refrigerants, the system shall be purged with oxygen-free nitrogen to render the appliance safe for flammable refrigerants. This process might need to be repeated several times. Compressed air or oxygen shall not be used for purging refrigerant systems.

For appliances containing flammable refrigerants, refrigerants purging shall be achieved by breaking the vacuum in the system with oxygen-free nitrogen and continuing to fill until the working pressure is achieved, then venting to atmosphere, and finally pulling down to a vacuum (optional for A2L). This process shall be repeated until no refrigerant is within thesystem (optional for A2L). When the final oxygen-free nitrogen charge is used, the system shall be vented down to atmospheric pressure to enable work to take place.

The outlet for the vacuum pump shall not be close to any potential ignition sources, and ventilation shall be available.

17. Charging procedures

In addition to conventional charging procedures, the following requirements shall be followed:

Works shall be undertaken with appropriate tools only (In case of uncertainty, please consult the manufacturer of the tools for use with flammable refrigerants)

Ensure that contamination of different refrigerants does not occur when using charging equipment. Hoses or lines shall be as short as possible to minimize the amount of refrigerant contained in them.

Cylinders shall be kept upright.

Ensure that the refrigeration system is earthed prior to charging the system with refrigerant.

Label the system when charging is complete(if not already).

Extreme care shall be taken not to overfill the refrigeration system.

Prior to recharging the system it shall be pressure tested with oxygen free nitrogen (OFN). The system shall be leak tested on completion of charging but prior to commissioning. A follow up leak test shall be carried out prior to leaving the site.

18. Decommissioning

Before carrying out this procedure, it is essential that the technician is completely familiar with the equipment and all its detail. It is recommended good practice that all refrigerants are recovered safely. Prior to the task being carried out, an oil and refrigerant sample shall be taken in case analysis is requiredprior to re-use of recovered refrigerant. It is essential that electrical power is available before the task iscommenced.

a) Become familiar with the equipment and its operation.
b) Isolate system electrically
c) Before attempting the procedure ensure that:

- mechanical handling equipment is available, if required, for handling refrigerant cylinders;
- all personal protetive equipment is available and being used correctly;
- the recovery process is supervised at all times by a competent person;
- recovery equipment and cylinders conform to the appropriate standards.

d) Pump down refrigerant system, if possible.
e) If a vacuum is not possible, make a manifold so that refrigerant can be removed from various parts of the system.
f) Make sure that cylinder is situated on the scales before recovery takes place.
g) Start the recovery machine and operate in accordance with instructions.
h) Do not overfill cylinders (no more than 80 % volume liquid charge)
i) Do not exceed the maximum working pressure of the cylinder, even temporarily.
j) When the cylinders have been filled correctly and the process completed, make sure that the cylinders and the equipment are removed from site promptly and all isolation valves on the equipment are closed off.
k) Recovered refrigerant shall not be charged into another refrigeration system unless it has been cleaned and checked.

19. Labeling

Equipment shall be labelled stating that it has been de-commissioned and emptied of refrigerant. The label shall be dated and signed. For appliances containing FLAMMABLE REFRIGERANTS, ensure that there are labels on the equipment stating the equipment contains FLAMMABLE REFRIGERANT.

20. Recovery

When removing refrigerant from a system, either for servicing or decommissioning, it is recommended good practice that all refrigerants are removed safely.
When transferring refrigerant into cylinders, ensure that only appropriate refrigerant recovery cylinders are employed. Ensure that the correct number of cylinders for holding the total system charge is available. All cylinders to be used are designated for the recovered refrigerant and labelled for that refrigerant (i. e. special cylinders for the recovery of refrigerant). Cylinders shall be complete with pressure-relief valve and associated shut-off valves in good working order. Empty recovery cylinders are evacuated and, if possible,cooled before recovery occurs.
The recovery equipment shall be in good working order with a set of instructions concerning the equipment that is at hand and shall be suitable for the recovery of the flammable refrigerant. If in doubt, the manufacturer should be consulted. In addition, a set of calibrated weighing scales shall be available and in good working order. Hoses shall be complete with leak-free disconnect couplings and in good condition.
The recovered refrigerant shall be processed according to local legislation in the correct recovery cylinder, and the relevant waste transfer note arranged. Do not mix refrigerants in recovery units and especially not in cylinders.
If compressors or compressor oils are to be removed, ensure that they have been evacuated to an acceptable level to make certain that flammable refrigerant does not remain within the lubricant. The compressor body shall not be heated by an open flame or other ignition sources to accelerate this process. When oil is drained from a system, it shall be carried out safely.

21. Unventilated areas

- An unventilated area where the appliance using FLAMMABLE REFRIGERANTS is installed shall be so constructed that should any refrigerant leak, it will not stagnate so as to create a fire or explosion hazard.
- If appliances connected via an air duct system to one or more rooms with A2L REFRIGERANTS are installed in a room with an area less than Amin,that room shall be without continuously operating open flames (e.g. an operating gas appliance) or other POTENTIAL IGNITION SOURCES (for e.g. an operating electric heater, hot surfaces). A flame-producing device may be installed in the same space if the device is provided with an effective flame arrest.
- Auxiliary devices which may be a POTENTIAL IGNITION SOURCE shall not be installed in the duct work. Examples of such POTENTIAL IGNITION SOURCES are hot surfaces with a temperature exceeding 700 °C and electric switching devices.
- Only auxiliary devices(such as certificated heater kit) approved by the appliance manufacturer or declared suitable with the refrigerant shall be installed in connecting ductwork.
- For duct connected appliances, false ceilings or drop ceilings may be used as a return air plenum if a REFRIGERANT DETECTION SYSTEM is provided in the appliance and any external connections are also provided with a sensor immediately below the return air plenum duct joint.
- REFRIGERANT SENSORS for REFRIGERANT DETECTION SYSTEMS Shall Only be replaced with sensors specified by the appliance manufacture.
- LEAK DETECTION SYSTEM installed. Unit must be powered except for service.

22. Transportation, marking and storage for units that employ flammable refrigerants

a. General

The following information is provided for units that employ FLAMMABLE REFRIGERANTS.

b. Transport of equipment containing flammable refrigerants

Attention is drawn to the fact that additional transportation regulations may exist with respect to equipment containing flammable gas. The maximum number of pieces of equipment or the configuration of the equipment permitted to be transported together will be determined by the applicable transport regulations.

c. Marking of equipment using signs

Signs for similar appliances used in a work area are generally addressed by local regulations and give the minimum requirements for the provision of safety and/or health signs for a work location.

All required signs are to be maintained and employers should ensure that employees receive suitable and sufficient instruction and training on the meaning of appropriate safety signs and the actions that need to be taken in connection with these signs.

The effectiveness of signs should not be diminished by too many signs being placed together.

Any pictograms used should be as simple as possible and contain only essential details.

d. Disposal of equipment using flammable refrigerants

See national regulations.

e. Storage of equipment/appliances

The storage of the appliance should be in accordance with the applicable regulations or instructions,whichever is more stringent.

f. Storage of packed (unsold) equipment

Storage package protection should be constructed in such a way that mechanical damage to the equipment inside the package will not cause a leak of the REFRIGERANT CHARGE.

The maximum number of pieces of equipment permitted to be stored together will be determined by local regulations.

Explanation of symbols displayed on the indoor unit or outdoor unit

A2L	**WARNING**	This symbol shows that this appliance used a flammable refrigerant. If the refrigerant is leaked and exposed to an external ignition source, there is a risk of fire.
	CAUTION	This symbol shows that the operation manual should be read carefully.
	CAUTION	This symbol shows that a service personnel should be handling this equipment with reference to the installation manual.
	CAUTION	
	CAUTION	This symbol shows that information is available such as the operating manual or installation manual.

1. ACCESSORIES

The air conditioning system comes with the following accessories. Use all of the installation parts and accessories to install the air conditioner. Improper installation may result in water leakage, electrical shock and fire, or equipment failure.

Accessories (Packed with the indoor unit)

Name	Picture	Quantity
Manual		2
Cable ties		8
Insulation sleeve	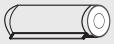	2
Flare nut		2
Braze to flare adapter	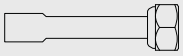	2
Magnetic ring (Hitch it on the connective cable between indoor unit and outdoor unit after installation.)(some models)		Varies by model

Note: Some models have magnetic rings in the accessories, Hitch it on the connective cable between indoor unit and outdoor unit, and approach outdoor unit.

2. INDOOR UNIT INSTALLATION

⚠ CAUTION

Install the indoor and outdoor units, cables and wires at least 1m (3-1/5′) from televisions or radios to prevent static or image distortion. Depending on the appliances, a 1m (3-1/5′) distance may not be sufficient.

The Indoor unit must be electrically grounded per national and local electrical code.

2.1 Select the installation location of indoor units

WARNING
DO NOT LOCATIONS:

DO NOT install the indoor unit in a moist environment. Excessive moisture can corrode the equipment, electrical components, and cause electrical shorts.

Areas with strong electromagnetic waves.

Coastal areas with high salt content in the air.

Areas with oil drilling or fracking.

Areas that store flammable materials or gas.

Areas where there may be detergent or other corrosive gases in the air, such as bathrooms, or laundry rooms.

Areas where the air inlet and outlet may be obstructed.

Danger of explosion. Keep flammable materials and vapors, such as gasoline, away from air handler.

WARNING
MUST BE INSTALLED IN A LOCATION THAT MEETS THE FOLLOWING REQUIREMENTS:

A stable position

☑ Securely install the indoor unit on a structure that can support its weight. If the structure is too weak, the unit may fall and cause personal injury, unit and property damage, or death.

Must support the weight of the indoor unit.

☑ The structure that the equipment is suspended from must support the weight of the indoor unit.

☑ Enough room for installation and maintenance.

☑ Enough room for the connecting pipe and drainpipe.

2.2 Unit dimensions

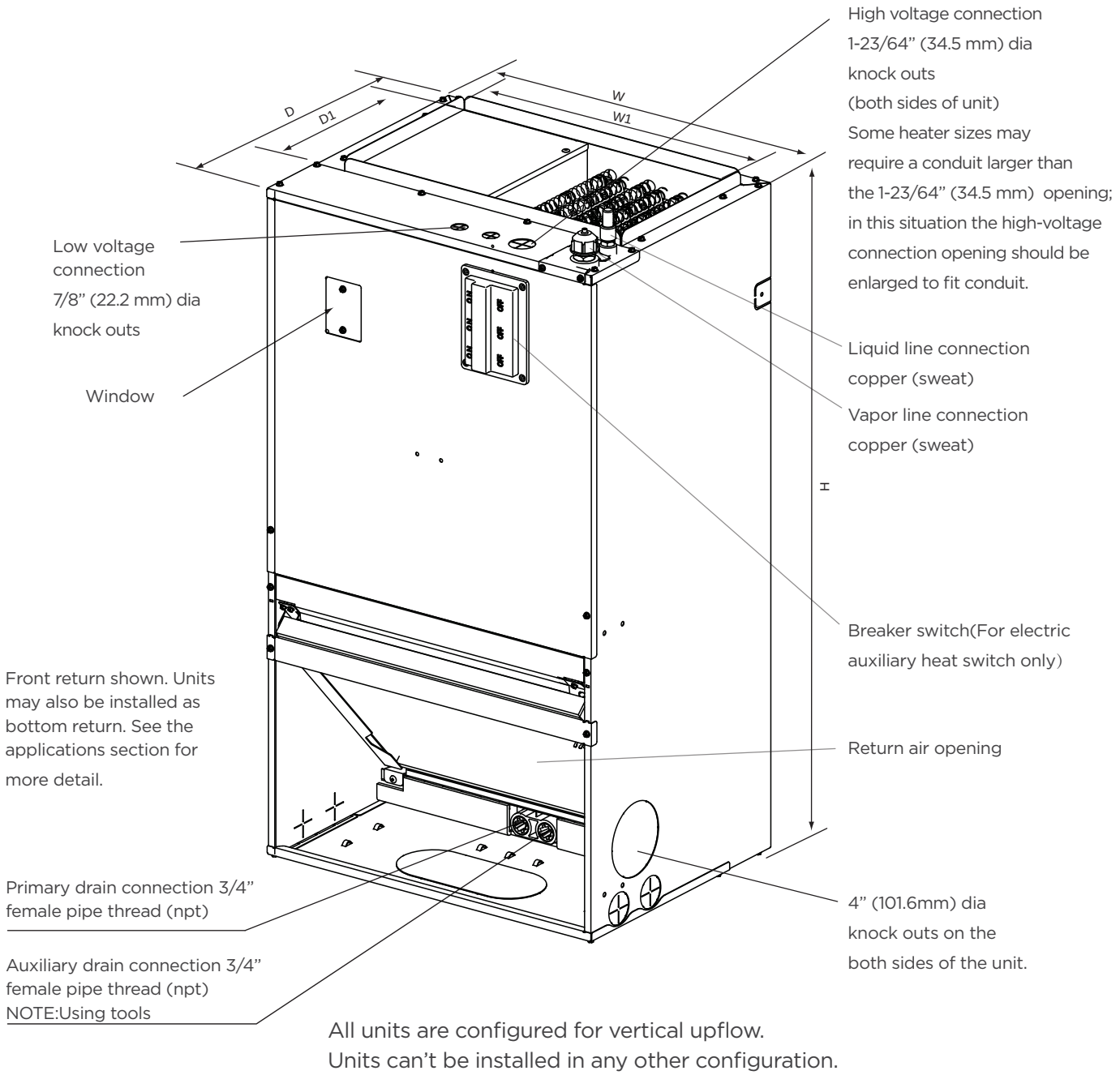

All units are configured for vertical upflow.
Units can't be installed in any other configuration.

Fig.1 DIMENSIONS

DIMENSIONAL DATA (unit: inch)

Unit	Height (H)	Width (W)	Depth (D)	Supply Width (W1)	Supply Depth (D1)	Filter Size	Weight (lbs)
18MUC*	36.5	20.3	15.7	17.5	10.5	14x18x1	88.5
24MUC*	36.5	20.3	15.7	17.5	10.5	14x18x1	88.5
30MUC*	40.0	22.0	19.0	18.8	9.3	20x20x1	109
36MUC*	40.0	22.0	19.0	18.8	9.3	20x20x1	109

2.3 Air filter（not factory-installed）dimensions

External filter or other means of filtration is required. Units should be sized for a maximum of 300 feet/min. air velocity or what is recommended for the type filter installed.

Filter application and placement are critical to airflow, which may affect the heating and cooling system performance. Reduced airflow can shorten the life of the system's major components, such as motor, limits, elements, heat relays, evaporator coil or compressor. Consequently, we recommend that the return air duct system have only one filter location. For systems with a return air filter grill or multiple filter grills, can have a filter installed at each of the return air openings.

If adding high efficiency filters or electronic air filtration systems, it is very important that the air flow is not reduced. If air flow is reduced the overall performance and efficiency of the unit will be reduced. It is strongly recommended that a profesional installation technician is contacted to ensure installation of these such filtration systems are installed correctly.

IMPORTANT: DO NOT DOUBLE FILTER THE RETURN AIR DUCT SYSTEM. DO NOT FILTER THE SUPPLY AIR DUCT SYSTEM.THIS WILL CHANGE THE PERFORMANCE OF THE UNIT AND REDUCE AIRFLOW.

NOTE:
The user needs to use a standard filter that meets the requirements of UL900.

⚠ WARNING

- **Do not** operate the system without filters. A portion of the dust entrained in the air may temporarily lodge In the duct runs and at the supply registers. Any circulated dust particles could be heated and charred by contact with the air handler elements. This residue could soil ceilings, walls, drapes, carpets and other articles in the house.
- Soot damage may occur with filters in place, when certain types of candles, oil lamps or standing pilots are burned.

FILTER INSTALLATION DIMENSIONS

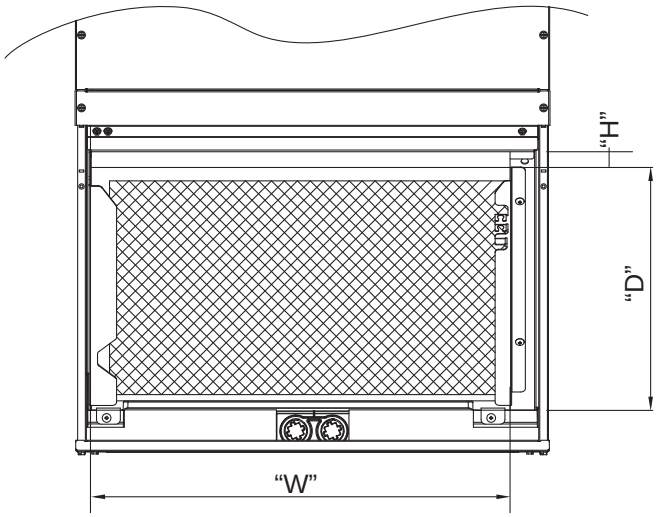

DIMENSIONAL DATA

MODEL	FILTER SIZE IN [mm]	"W" IN [mm]	"D" IN [mm]	"H" IN [mm]
18/24	14x18 [356x457]	18 [457]	14 [356]	1 [25.4]
30/36	20X20 [508X508]	20 [508]	20 [508]	1 [25.4]

2.4 Air handler mounting option

The air handler comes standard with two different options for mounting, wall mount or frame mount. Both mounting options require the unit to be level from side to side and from front to back in order to allow condensate to properly drain from the unit. Failure to do this will result in condensate to leak out from the unit potentially causing structural damage to the surrounding support structures, dry wall, carpet, etc. around the unit. Also, both mounting structures require the ability to accommodate a minimum of 165 lb load. Failure to do this will cause damage to the support structure and potentially damage the unit.

2.4.1 Unpacking

Carefully unpack the unit and inspect the contents for damage. If any damage is found at the time of delivery, proper notification and claims should be made with the carrier.Check the rating plate to assure model number and voltage, plus any kits match with what you ordered. The manufacturer should be notified within 5 days of any discrepancy or parts shortage.

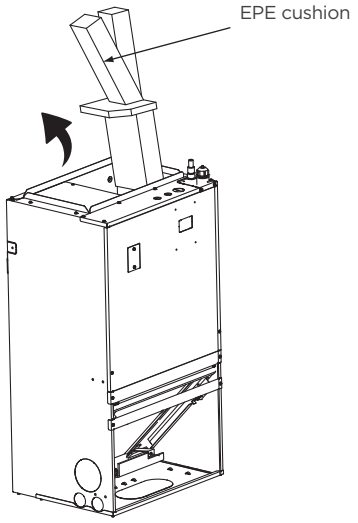

⚠ CAUTION

- Remove the EPE cushion installed in the wind turbine.

2.4.2 Select the return air method (default front return air)

Bottom Return Conversion Kit is used to divert the return air from the factory standard front return to a bottom return.

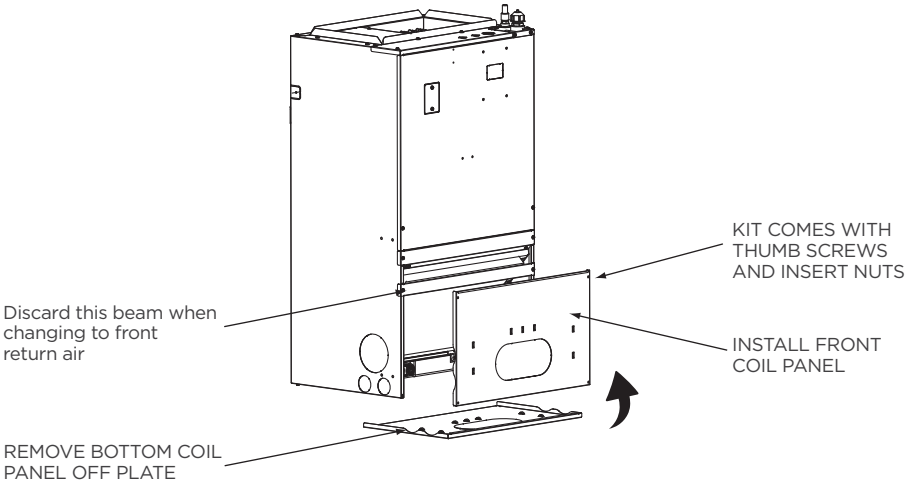

Installation completed diagram:

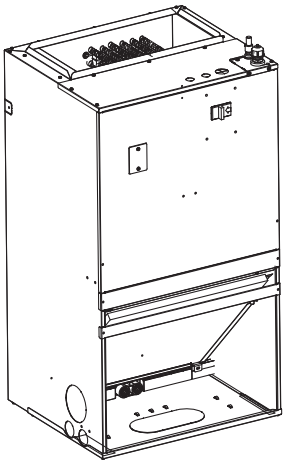

Front return air

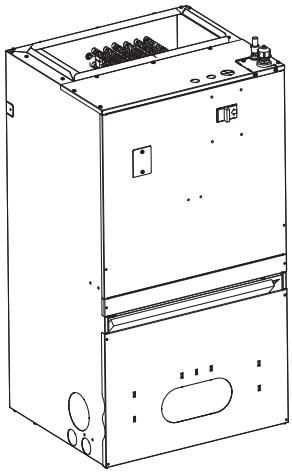

Bottom return air

2.4.3 Location

The small air handler should be centrally located and may be installed in a closet, alcove, utility room,basement. Minimum clearances must be met.The air handler comes standard with two different options for mounting, wall mount or frame mount. Both mounting options require the unit to be level from side to side and from front to back in order to allow condensate to properly drain from the unit. Failure to do this will result in condensate to leak out from the unit potentially causing structural damage to the surrounding support structures, dry wall, carpet, etc. around the unit. Also, both mounting structures require the ability to accommodate a minimum of 360 lb load. Failure to do this will cause damage to the support structure and potentially damage the unit.

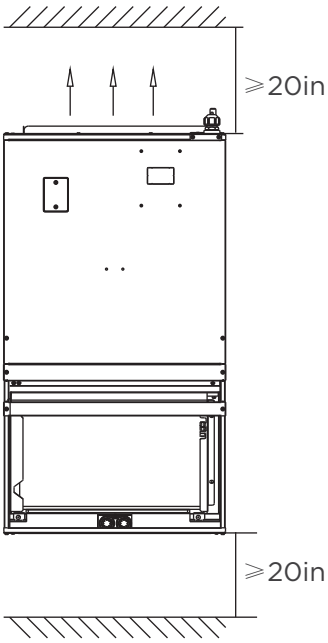

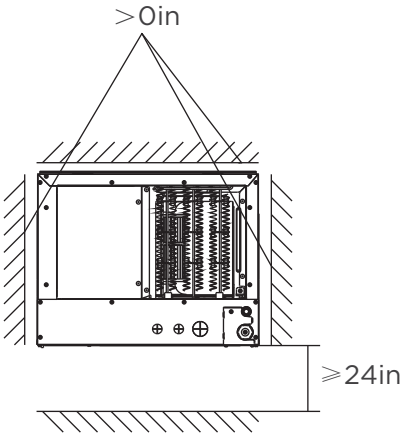

2.4.4 Mounting

(1)Wall mount

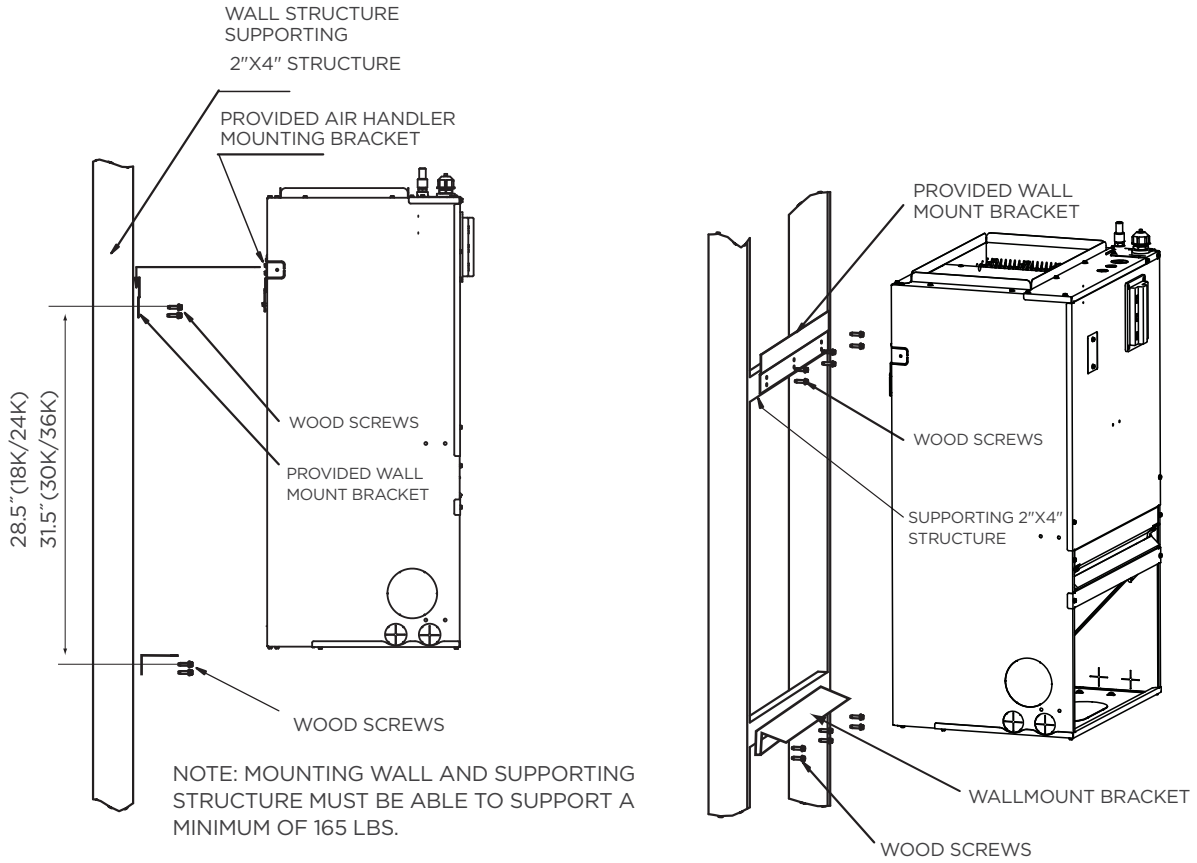

WALL MOUNT

(2)Frame mount

FIGURE 6
FRAME MOUNT

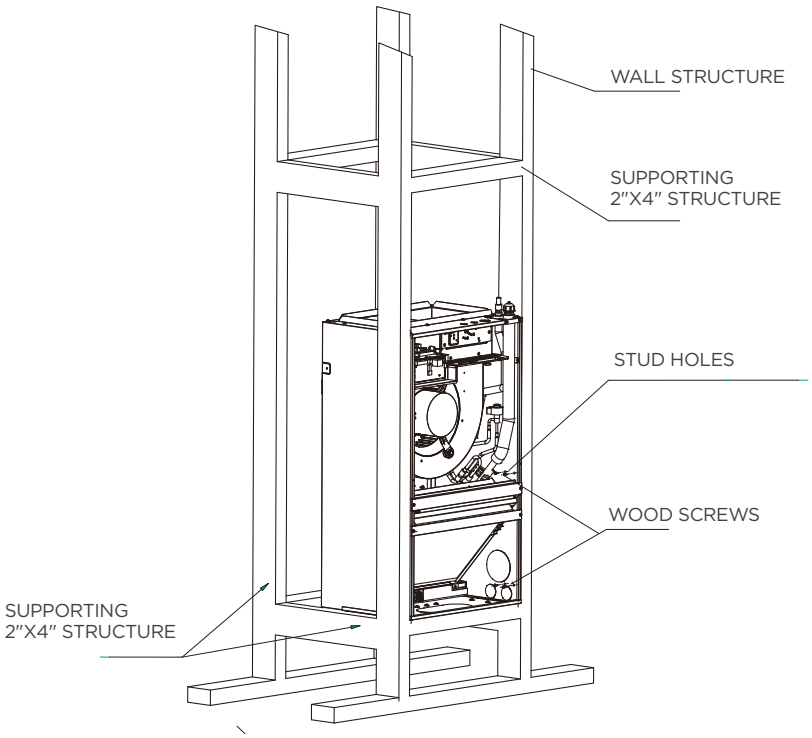

FRAME MOUNT

2.4.5 Carton cutting and wall panel pre-positioning

(1) Cut the cardboard box with the mounting tabs along the dotted lines.

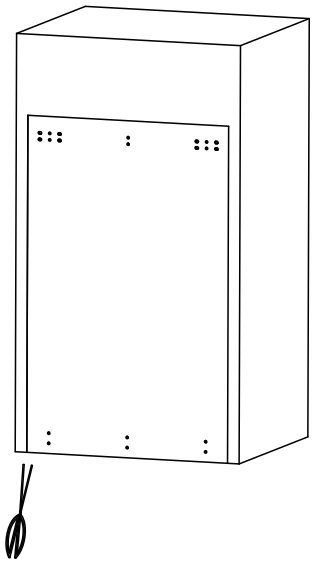

(2) The part you need to punch the mounting holes has a total of 12 screws.

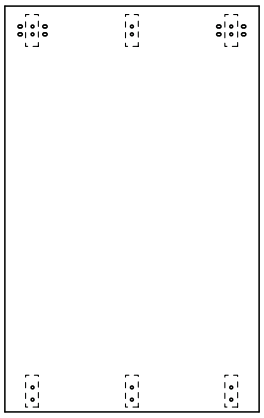

(3) Attach the mounting template sheet horizontally to the mounting plate and drill holes in a solid black circl using a drill. There are 12 of these holes that must be drilled.

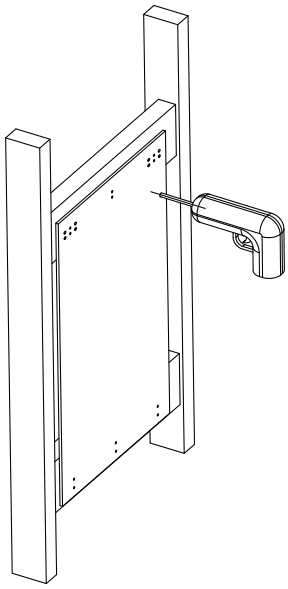

(4) Remove the wall panels from the product.

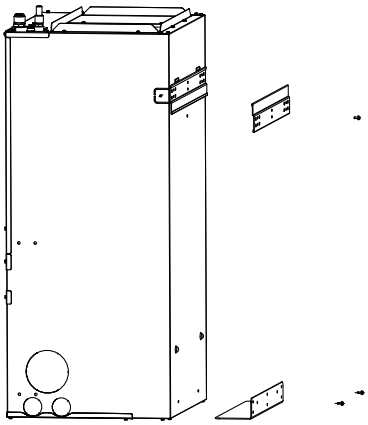

(5) Remove the mounting template sheet, put the mounting bracket on the mounting hole, and fix the upper and lower brackets with 6 screws respectively.

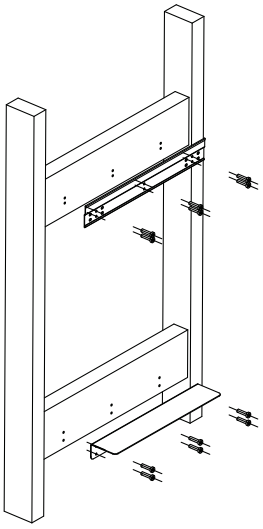

2.4.6 Product hanging on the support frame, auxiliary installation hole instructions for use

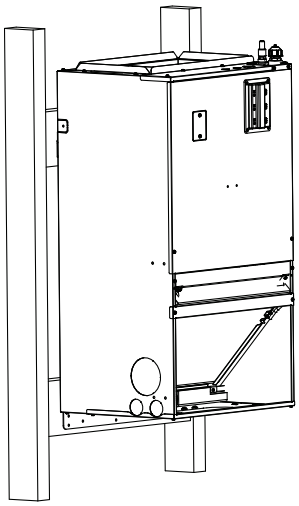

(1)
Hang the prototype on the already fixed stand.

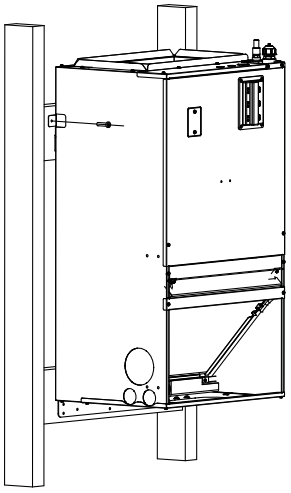

(2)
Cut both sides of the product's ear spreading and spread it flat, and fix it on the bracket with screws for auxiliary fixing

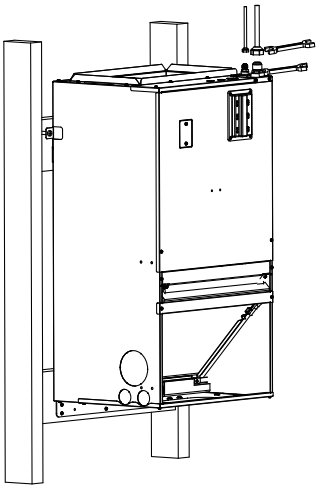

(3)
The adapter tube of the product is firmly fixed to the body by 2 wrenches.

2.4.7 Connection of drainage pipe

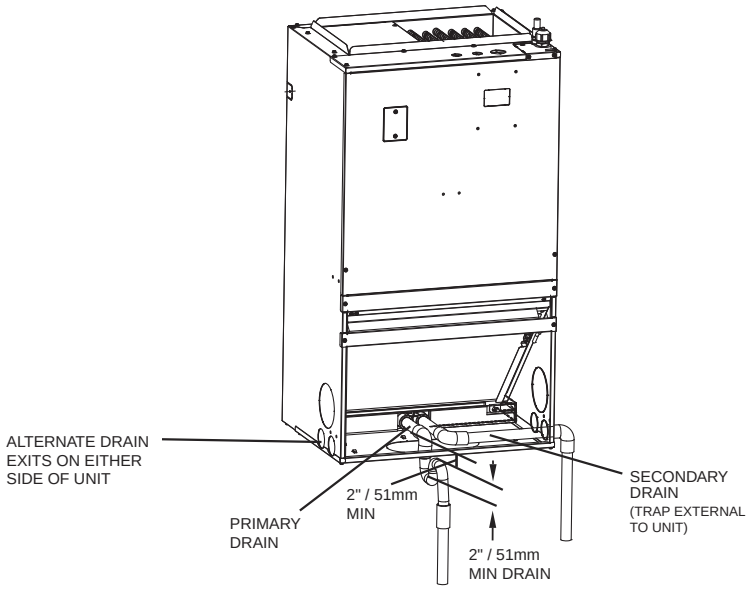

NOTE

Use metal drains in the area above the cover.

2.4.8 Connection of duct

Please connect the duct as shown in the diagram.

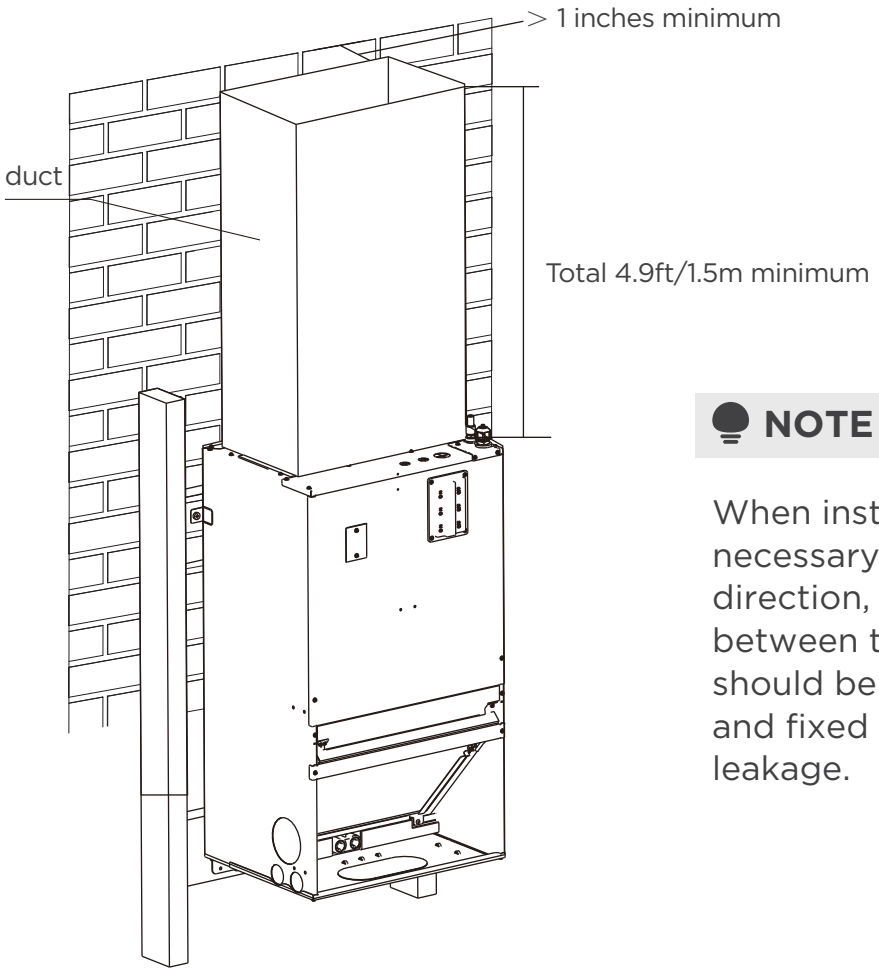

NOTE

When installing the air duct, it is necessary to keep the vertical direction, and the connection between the flange and the air outlet should be sealed with fireproof tape and fixed with screws to avoid air leakage.

2.5 Ductwork

NOTICE FOR DUCT CONNECTIONS:

It should be assembled accordance to the instructions.

It should be insulated and use a Vapor Barrier.

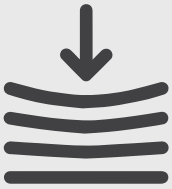

It should be Flexible suspension mounted and not fastened

It should be fabricated and installed in accordance with local and/or national codes.

More Requirements

- Air supply and return may be handled in one of several ways best suited to the installation (See table for dimensions for duct inlet and outlet connections).
  The vast majority of problems encountered with combination cooling systems can be linked to improperly designed or installed duct systems.
  It is therefore highly important to the success of an installation that the duct system be properly designed and installed. Use flexible duct collars to minimize the transmission of vibration/noise into the conditioned space.
  Where return air duct is short, or where sound could potentially to be a problem, sound absorbing liner should be used inside the duct.
- Duct must be insulated where it runs through an unconditioned space during the cooling season.
  The use of a vapor barrier is recommended to prevent absorption of moisture from the surrounding air into the insulation.
- The supply air duct connection should be properly sized by use of a transition to match unit opening.
- All ducts should be suspended using flexible hangers and never fastened directly to the structure.
- This unit is not designed for nonducted (freeblow) applications.
- Duct work should be fabricated and installed in accordance with local and/or national codes.

Field ductwork must comply with the National Fire Protection Association NFPA 90A, NFPA 90B and any applicable local ordinance.

⚠ WARNING

- **Do not** under any circumstances, connect return ductwork to any other heat producing device such as fireplace insert, stove, etc. Unauthorized use of such devices may result in fire, carbon monoxide poisoning, explosion, personal injury or property damage.

Sheet metal ductwork run in unconditioned spaces must be insulated and covered with a vapor barrier. Fibrous ductwork may be used if constructed and installed in accordance with SMACNA Construction Standard on Fibrous Glass Ducts. Ductwork must comply with National Fire Protection Association as tested by U/L Standard 181 for Class I Air Ducts. Check local codes for requirements on ductwork and insulation.

- Duct system must be designed within the range of external static pressure the unit is designed to operate against. It is important that the system airflow be adequate. Make sure supply and return ductwork, grills, special filters, accessories, etc. are accounted for in total resistance. See airflow performance tables in this manual.
- Design the duct system in accordance with all the local installtion code.
- Supply plenum is attached to the 3/4” duct flanges supplied with the unit. Attach flanges around the blower outlet.
- IMPORTANT: If an elbow is included in the plenum close to the unit, it must not be smaller than the dimensions of the supply duct flange on the unit.
- IMPORTANT: The front flange on the return duct if connected to the blower casing must not be screwed into the area where the power wiring is located. Drills or sharp screw points can damage insulation on wires located inside unit.
- Secure the supply and return ductwork to the unit flanges, using proper fasteners for the type of duct used and tape the duct-to-unit joint as required to prevent air leaks.
- Condensate drain line must be routed to a location such that the user will see the condensate discharge.

Airflow performance

Airflow performance data is based on cooling performance with a coil and no filter in place. Select performance table for appropriate unit size external static applied to unit allows operation within the minimum and maximum limits shown in table below for both cooling and electric heat operation.

Model		External Static Pressure(in.w.c.)				
		0	0.2	0.3	0.5	0.8
18MUC*	Turbo	625	625	625	625	625
	Watts	82.6	108.3	121.3	152.1	196.3
	High	584	584	584	584	584
	Watts	70.7	99.6	104.5	132.3	181.3
	Med-High	536	536	536	536	536
	Watts	59.4	78.8	92.5	121.3	166.2
	Low	494	494	494	494	494
	Watts	50.6	75.3	85.5	110.4	152.3
24MUC*	Turbo	833	833	833	833	833
	Watts	161	183	196	243	316
	High	768	768	768	768	768
	Watts	139.8	162	184	212.2	262.3
	Med-Low	702	702	702	702	702
	Watts	110.8	142.8	175.5	208.3	225.3
	Low	625	625	625	625	625
	Watts	82.6	108.3	121.3	152.1	196.3
30MUC*	Turbo	995	995	995	995	995
	Watts	131	183	200.5	245.2	341
	High	912	912	912	912	912
	Watts	99.6	152.4	172.8	206.7	300
	Med-Low	806	806	806	806	806
	Watts	76.6	118.8	134.1	175.7	256.2
	Low	706	706	706	706	706
	Watts	54.9	93.8	112.1	153.1	216.2
36MUC*	Turbo	1202	1202	1202	1202	1202
	Watts	181	259	279.4	337.3	441
	High	1083	1083	1083	1083	1083
	Watts	155.7	218.4	238.3	291.5	385
	Med-Low	971	971	971	971	971
	Watts	119.9	171.5	190.3	233.6	326
	Low	865	865	865	865	865
	Watts	88	135	152	196.4	277.5

2.6 connecting the wire and pipes（pipes and drainage pipes）

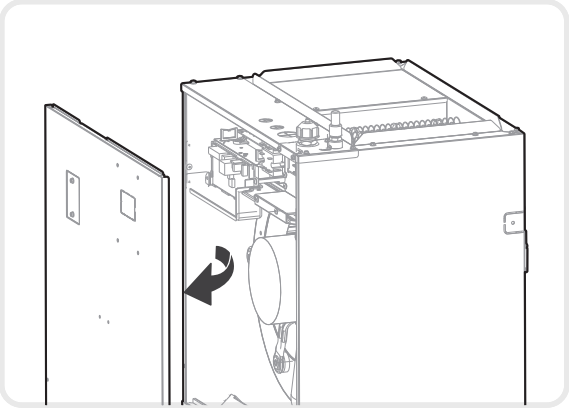

Step 1

Open the upper cover.

Step 2

Open the cover of the electronic control box.

Step 3

Connect the wire according to the wiring diagram.

Step 4

Connect the pipes and install the drainage pipes.

NOTICE

- If installed above a finished living space, a secondary drain pan (as required by many building codes), must be installed under the entire unit and its condensate drain line must be routed to a location such that the user will see the condensate discharge.

NOTICE ON PURCHASING PIPES

- Installation requires pvc pipe or other suitable material per local and national codes, which can be obtained at your local hardware store or dealer.

⚠ CAUTION

- A field-fabricated secondary drain pan, with a drain pipe to the outside of the building, is required in all installations over a finished living space or in any area that may be damaged by overflow from the main drain pan. In some localities, local codes may require a secondary drain pan for any horizontal installation.

2.7 Refrigerant piping connection

⚠ WARNING

All field piping must be completed by a licensed technician and must comply with the local and national regulations.

- When the air conditioner is installed in a small room, measures must be taken to prevent the refrigerant concentration in the room from exceeding the safety limit in the event of refrigerant leakage. If the refrigerant leaks and its concentration exceeds its proper limit, hazards due to lack of oxygen may result.
- When installing the refrigeration system, ensure that air, dust, moisture or foreign substances do not enter the refrigerant circuit. Contamination in the system may cause poor operating capacity, high pressure in the refrigeration cycle, explosion or injury.
- Ventilate the area immediately if there is refrigerant leakage during the installation. Leaked refrigerant gas is both toxic and may be flammable. Ensure there is no refrigerant leakage after completing the installation work.

Connection Instructions—Refrigerant Piping

Air Handler Unit Model	Air Handler Unit Connection(in.flare)		Adapter Required at Air Handler Unit(in.flare to braze)
18K/24K	Liquid	3/8	3/8flare→3/8braze
	Gas	3/4	3/4flare→3/4braze
30K/36K	Liquid	3/8	3/8flare→3/8braze
	Gas	3/4	3/4flare→3/4braze

Step 1: Cut pipes

When preparing refrigerant pipes, take extra care to cut and flare them properly. This will ensure efficient operation and minimize the need for future maintenance.

- Measure the distance between the indoor and outdoor units.
- Using a pipe cutter, cut the pipe a little longer than the measured distance.
- Make sure that the pipe is cut at a perfect 90° angle.

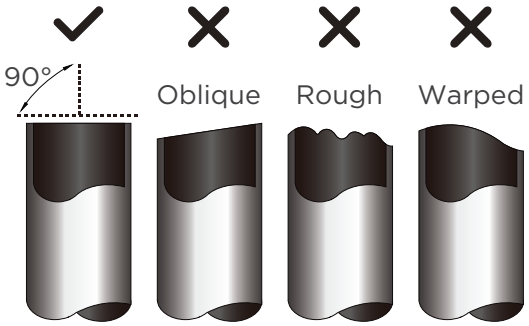

DO NOT DEFORM PIPE WHILE CUTTING

Be extra careful not to damage, kink, or deform the pipe while cutting. This will drastically reduce the heating performance.

Step 2: Remove burrs

Burrs can affect the air-tight seal of refrigerant piping connection. They must be completely removed.

- Hold the pipe at a downward angle to prevent burrs from falling into the pipe.
- Using a reamer or deburring tool, remove all burrs from the cut section of the pipe.

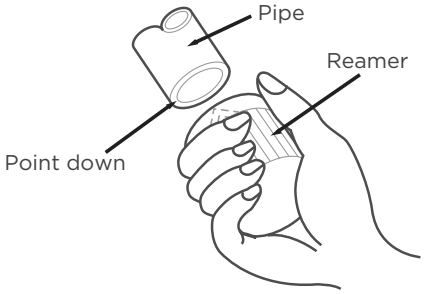

Step 3: Flare pipe ends

Proper flaring is essential to achieve an airtight seal.

- After removing burrs from cut pipe, seal the ends with PVC tape to prevent foreign materials from entering the pipe.
- Sheath the pipe with insulating material.
- Place flare nuts on both ends of pipe. Make sure they are facing in the right direction, because you can't put them on or change their direction after flaring.

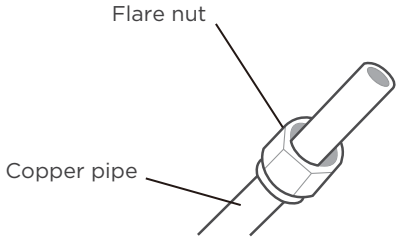

- Remove PVC tape from ends of pipe when ready to perform flaring work.

- Clamp flare from on the end of the pipe. The end of the pipe must extend beyond the flare form.

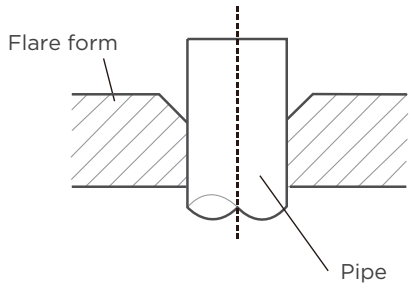

- Place flaring tool onto the form.
- Turn the handle of the flaring tool clockwise until the pipe is fully flared.

PIPING EXTENSION BEYOND FLARE FORM

Pipe gauge	Tightening torque	Flare dimension(A) (Unit:mm/Inch)		Flare shape
		Min.	Max.	
Ø 6.35 (Ø 1/4")	18-20 N.m (180-200kgf.cm)	8.4/0.33	8.7/0.34	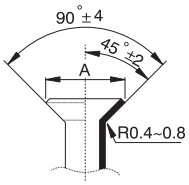
Ø 9.52 (Ø3/8")	32-39 N.m (320-390kgf.cm)	13.2/0.52	13.5/0.53	
Ø 12.7 (Ø 1/2")	49-59 N.m (490-590kgf.cm)	16.2/0.64	16.5/0.65	
Ø 16 (Ø 5/8")	57-71 N.m (570-710kgf.cm)	19.2/0.76	19.7/0.78	
Ø 19 (Ø 3/4")	67-101 N.m (670-1010kgf.cm)	23.2/0.91	23.7/0.93	
Ø 22 (Ø 7/8")	85-110 N.m (850-1100kgf.cm)	26.4/1.04	26.9/1.06	

- Remove the flaring tool and flare form, then inspect the end of the pipe for cracks and even flaring.

Step 4: Connect pipes

Connect the copper pipes to the indoor unit first, then connect it to the outdoor unit. You should first connect the low-pressure pipe, then the highpressure pipe.

- When connecting the flare nuts, apply a thin coat of refrigeration oil to the flared ends of the pipes.
- Align the center of the two pipes that you will connect.
- Tighten the flare nut snugly by hand.
- Using a wrench, grip the nut on the unit tubing.
- While firmly gripping the nut, use a torque wrench to tighten the flare nut according to the torque values in above table.

NOTICE

Use both a spanner and a torque wrench when connecting or disconnecting pipes to/from the unit.

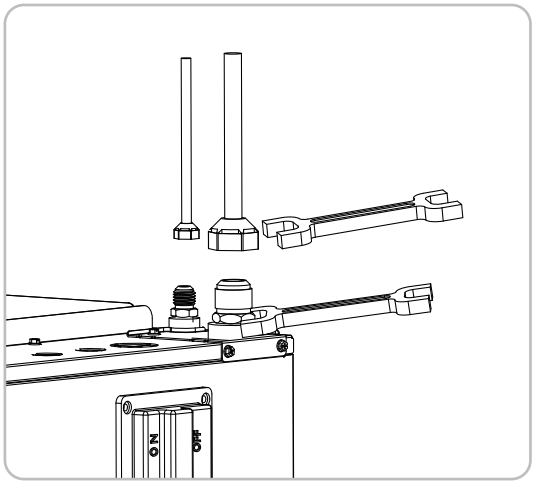

⚠ CAUTION

Ensure to wrap insulation around the piping.Direct contact with the bare piping may result in burns or frostbite.

- Make sure the pipe is properly connected.Over tightening may damage the bell mouth and under tightening may lead to leakage.

NOTICE

MINIMUM BEND RADIUS

Carefully bend the tubing in the middle according to the diagram below.
DO NOT bend the tubing more than 90° or more than 3 times.

Use appropriate tool

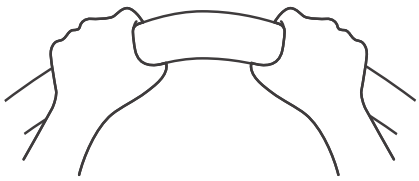

min-radius 10cm(3.9")

- After connecting the copper pipes to the indoor unit, wrap the power cable, signal cable and the piping together with binding tape.

NOTICE

DO NOT intertwine or cross the signal cable with any other wiring.

- Thread this pipeline through the wall and connect it to the outdoor unit.
- Insulate all the piping, including the valves of the outdoor unit.
- Open the stop valves of the outdoor unit to start the flow of the refrigerant between the indoor and outdoor unit.

⚠ CAUTION

Check to make sure there is no refrigerant leak after completing the installation work.If there is a refrigerant leak, ventilate the area immediately and evacuate the system (refer to the Air Evacuation section of this manual).

Air-Handler Air Conditioners Refrigerant Piping Connection

Correct Refrigerant piping Connecting installation methods

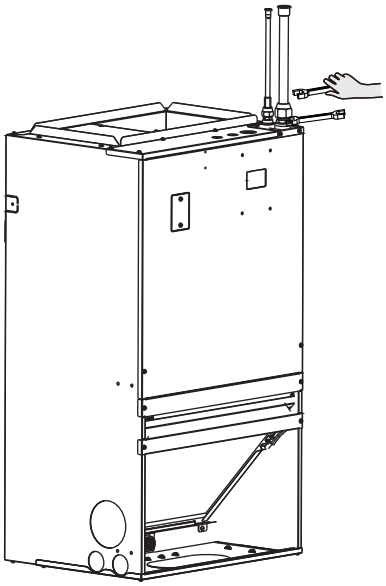

Plan 1

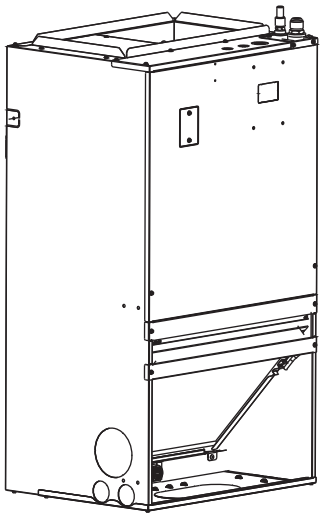

Plan 2

Braze connection

Insulation sleeve

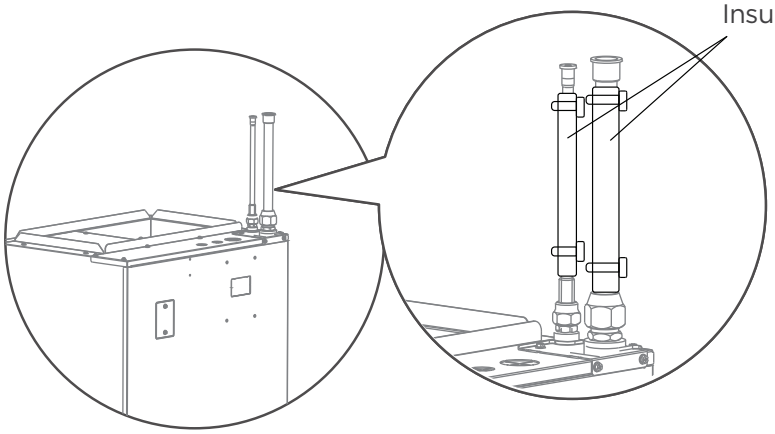

After the unit is installed, wrap the piping and brass fitting with foam tape.

You need to wrap all the connected copper pipes, nuts and other metal parts into the sponge.

2.8 Leak Dissipation System

⚠ WARNING

PERSONAL INJURY OR PROPERTY DAMAGE HAZARD

Failure to follow proper R-454B mitigation system installation instructions can result in property damage, personal injury, or death. If any fault codes are listed, please troubleshoot to prevent system malfunction.

The units come equipped with a factory wired R-454B leak detection and dissipation system to ensure safe operation during a leak. The system consists of a bracket, a PCB, a A2L Detection Sensor, and a drain pan clip. Failure to install this system will result in potentially hazardous conditions and improper equipment operation, and void all system warranties and liabilities.
All units are shipped with the A2L Detection Sensor located on the back side of the slope coil.

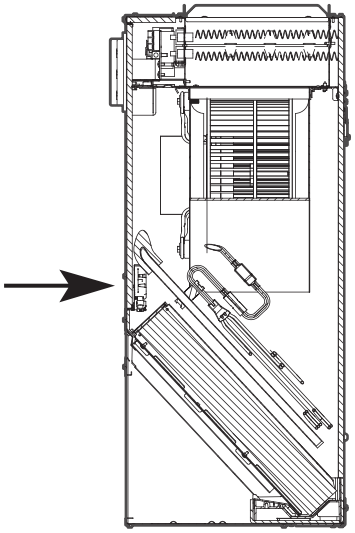

The A2L Detection Sensor is attached to a wiring harness that connects the sensor to the control board.

⚠ CAUTION

The refrigerant leakage sensor can only use the factory model or the specified model indicated in the corresponding manual.

The refrigerant leakage sensor can only use the factory model or the specified model indicated in the corresponding manual.
The R454B refrigerant leakage sensor must be used to activate the refrigerant shut-off device, the alarm device, incorporated circulation airflow or other emergency controls, which shall give an electrical signal at a predetermined alarm set point in response to leaked refrigerant.
The location of leakage sensors shall be chosen in relation to the different installation scenarios. Please refer to the indoor unit installation manual for specific requirements.
The installation of the refrigerant leakage sensor shall allow access for checking, repair or replacement by an authorized person.
The refrigerant leakage sensor shall be installed so its function can be verified easily.
The refrigerant leakage sensor shall be protected to prevent tampering or unauthorized resetting of the pre-set value.
To be effective, the refrigerant leakage sensor must be electrically powered at all times after installation, other than when servicing.
If the refrigerant leakage sensor detects a refrigerant leak, the fan will be turned on to the maximum, the compressor will stop running. you should immediately leave the leak area and notify a professional for handling.
The service life of the refrigerant sensor is 15 years, and it should be replaced after the service life.

⚠ WARNING

LEAK DETECTION SYSTEM installed on indoor unit. Unit must be powered except for service. Continuous air circulation required for proper functioning. Unit must be powered exceptfor service. This unit is equipped with electrically powered safety measures. To be effective. the unit must be electrically powered at all times after installation, other than when servicing.

2.9 Installation of electric auxiliary heat module (OPTIONAL) (Only for HEAT function models)

NOTICE

Installation must be performed by an licensed contractor. Please make necessary precaution when performing the installation operation.

Accessories

Name	Quantity	Name	Quantity
Manual	2	Silicone breaker cover	1
Foam gasket	1	Electric auxiliary heating wiring diagram	1
Screws	7	Circuit breaker label	1

Model size selection

For installations requiring supplemental heating, the optional Electric Auxiliary Heat Module is available in sizes from 3kW to 10kW to accommodate appropriate sizing given the specific heat load and electrical requirements of each installation. Please refer to the table below for selection of available sizes of each model, being sure to avoid improper matching.

MODEL (Btu/h)	3kW	5kW	8kW	10kW
18K	Y	Y	Y	Y
24K	Y	Y	Y	Y
30K	Y	Y	Y	Y
36K	Y	Y	Y	Y

NOTICE

Only use matched modules certified for use with model. Please refer to the Electric Auxiliary Heat Model specification for additional details to ensure proper selection and installation.

Preparations for Installation

Before installation, please confirm the electric auxiliary heat module and supplied accessories are complete and free of any damage. Do not attempt to install if damage is present.

Electric Auxiliary Heat Module installation and Wiring Operation

Step 1

Open the upper cover.

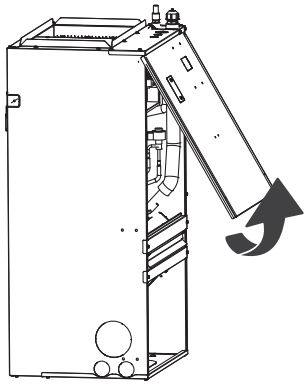

Step 2

Use tools to remove the knock-out holes of upper cover.

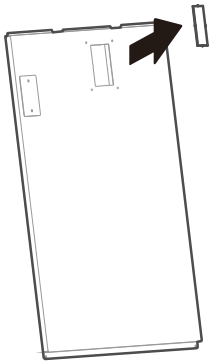

Step 3

Dismantle the terminal block and power wires, loosen the screws, and remove the electric auxiliary heating cover.

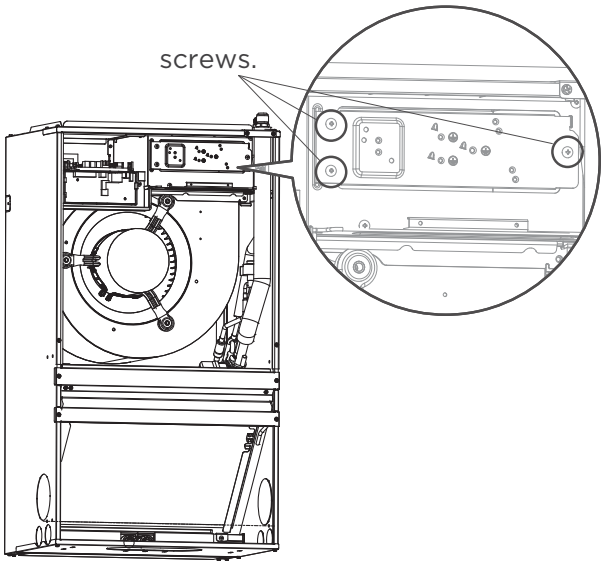

Step 4

Install the electric auxiliary heating assembly the front, and note that the support assembly must lock into the support holes in the back of the cabint.

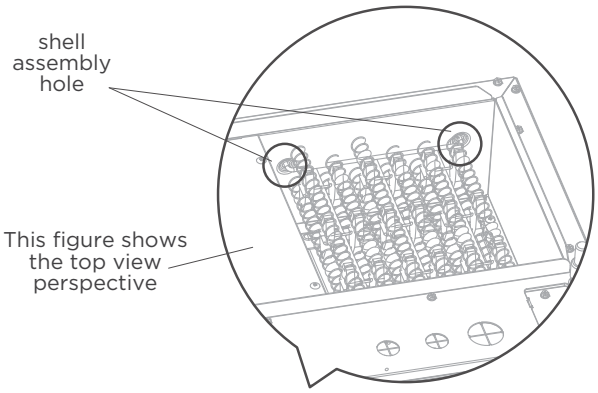

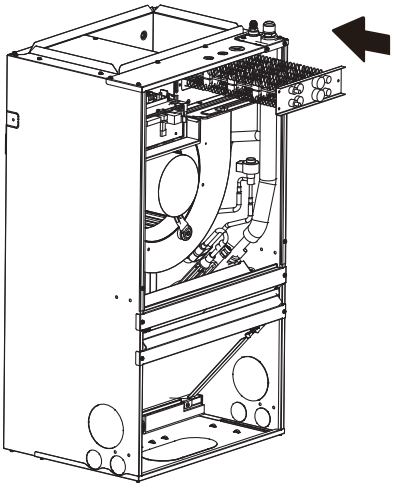

Step 5

Tighten the mounting screws.

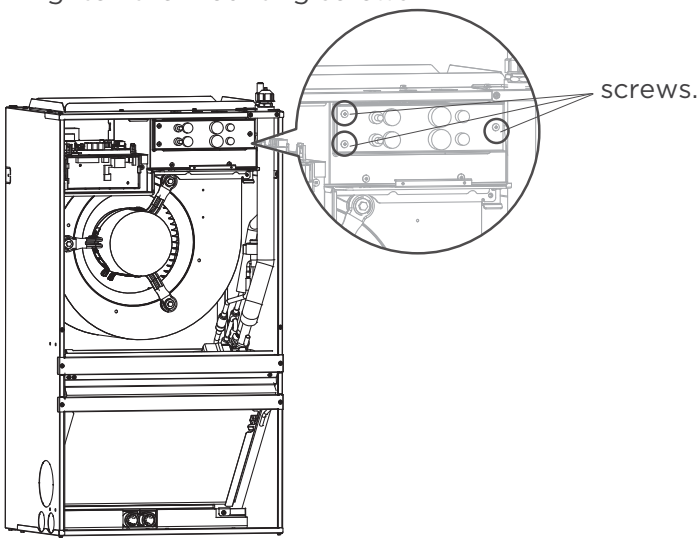

Step 6

Wire according to the wiring nameplate.
Apply the wiring diagram to the inside cover wiring is completed for future reference and maintenance.
Plug the electric heating plugs CN11 and CN12 into the main board.

Step 7

Tighten the mounting screws.

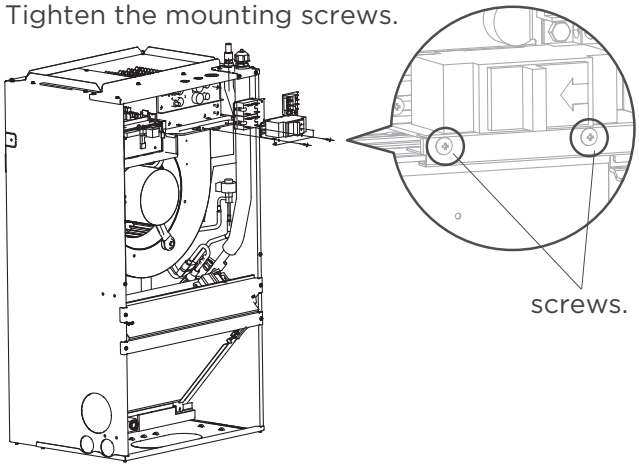

Step 8

Wire according to the wiring nameplate.
Apply the wiring diagram to the inside cover wiring is completed for future reference and maintenance.

Step 9

Install the upper cover,and the silicone breaker cover.

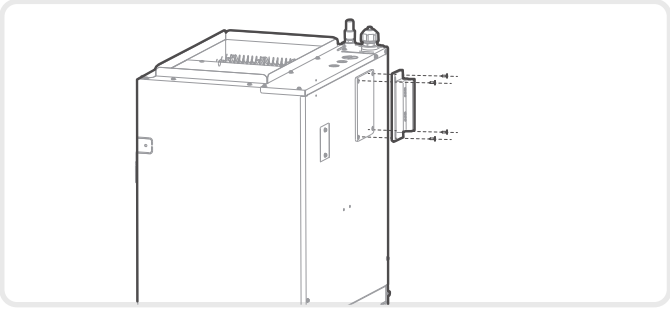

Step 10

After installing the electric auxiliary heat module, apply the circuit breaker label near the silicone breaker cover that was just applied.

confirmation of indoor unit

NOTICE

Electric auxiliary heating wiring diagram packed with the accessories.
If branch circuit wire lenght exceeds 100 ft, consult the Local electric code to determine maximum wire length.
Use 2% voltage drop.

After the electric heating wiring is connected, please confirm before power on:

- Check all wiring and ensure secure connection of all wiring.
- Ensure that wire size is properly selected per NEC or local codes.

Specifications	Number of circuit breakers	Number of relays	Number of power cord groups	Number of power cord grounding screws
3kW	1	1	2	2
5kW	1	1	2	2
8kW	1	2	2	2
10kW	1	2	2	2

Units without electrical heat

UNIT SIZE	VOITS-PHASE	Rated current	MCA (Minimum Circuit Ampacity)	BRANCH CIRCUIT	
				MIN WIRE SIZE AWG*	FUSE/CKT BKR AMPS
18K	115/208/230V-1	3.0	4.0	14#	15.0
24K	115/208/230V-1	3.0	4.0	14#	15.0
30K	115/208/230V-1	4.5	6.0	14#	15.0
36K	115/208/230V-1	5.0	6.5	14#	15.0

Use copper wire only to connect unit. If other than uncoated (non-plated) 75°C copper wire (solid wire for 10 AWG and smaller, stranded wire for larger than 10 AWG) is used consult applicable tables of the Local electric code.

NOTICE

The specification may be different between different models ,please refer to indoor unit's nameplate. Choose the cable type according to the local electrical codes and regulations. Please choose the right cable size according to the Minimum Circuit Ampacity indicated on the nameplate of the unit.

Auxilliary Heater Electrical Date（Optional）

Heater Part No.	Heater KW	Internal Circuit Protection	CIRCUIT 1 208/230V		
			Heater Amps	MCA (1)	MOP (2)
EAH-03C(UL)	3	Ckt Bkr	10.8/12.0	14.0/16.0	15.0/20.0
EAH-05C(UL)	5	Ckt Bkr	18.0/20.0	23.0/27.0	25.0/30.0
EAH-08C(UL)	8	Ckt Bkr	28.8/32.0	37.0/42.0	40.0/45.0
EAH-10C(UL)	10	Ckt Bkr	36.0/40.0	46.0/53.0	50.0/60.0

3. WIRING PRECAUTIONS

⚠ WARNING

BEFORE PERFORMING ANY ELECTRICAL WORK, READ THESE WARNINGS.

- All wiring must comply with local and national electrical codes, regulations and must be installed by a licensed electrician.
- All electrical connections must be made according to the Electrical Connection Diagramlocated on the panels of the indoor and outdoor units.
- If there is a serious safety issue with the power supply, stop work immediately. Explain your reasoning to the client, and refuse to install the unit until the safety issue is properly resolved.
- Power voltage should be within 90-110% of rated voltage. Insufficient power supply can cause malfunction, electrical shock, or fire.
- Installation of an external surge suppressor at the outdoor disconnect is recommended.
- If connecting power to fixed wiring, a switch or circuit breaker that disconnects all poles and has a contact separation of at least 1/8in (3mm) must be incorporated in the fixed wiring. The qualified technician must use an approved circuit breaker or switch.
- Only connect the unit to an individual branch circuit. Do not connect another appliance to that Circuit.
- Make sure to properly ground the air conditioner.
- Every wire must be firmly connected. Loose wiring can cause the terminal to overheat, resulting in product malfunction and possible fire.
- Do not let wires touch or rest against refrigerant tubing, the compressor, or any moving parts within the unit.
- To avoid getting an electric shock, never touch the electrical components soon after the power supply has been turned off. After turning off the power, always wait 10 minutes or more before you touch the electrical components.
- Make sure that you do not cross your electrical wiring with your signal wiring. This may cause distortion, interference or
- possibly damage to circuit boards.
- No other equipment should be connected to the same power circuit.
- Connect the outdoor wires before connecting the indoor wires.

⚠ WARNING

BEFORE PERFORMING ANY ELECTRICAL OR WIRING WORK, TURN OFF THE MAIN POWER TO THE SYSTEM.

Wiring overview

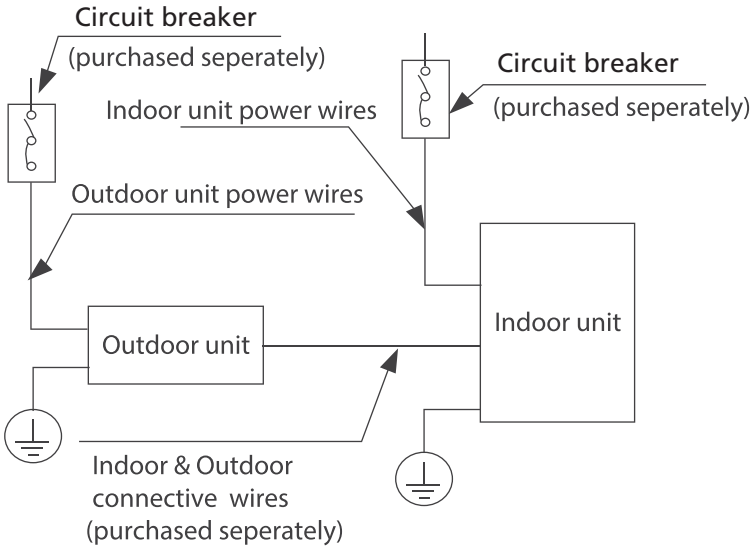

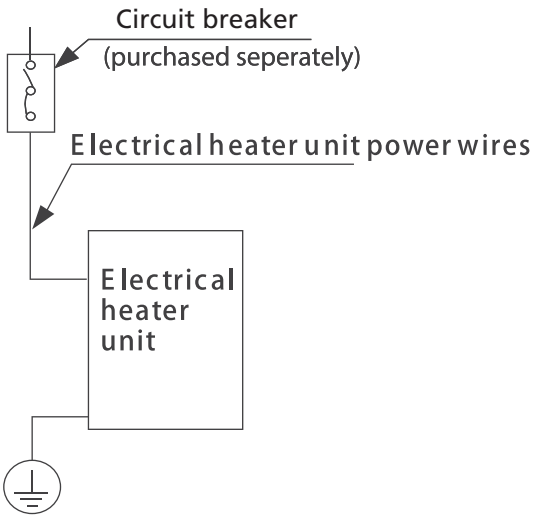

NOTICE

- The diagrams are for explanation purpose only. Your machine may be slightly different. The acyual diagram shall prevail.
- Please pay attention to the safety of the alignment when installing the line control or thermostat, and separate the strong and weak power alignment.

INDOOR UNIT WIRING

⚠ CAUTION

- While connecting the wires, please strictly follow the wiring diagram.
- The refrigerant circuit can become very hot. Keep the interconnection cable away from the copper tube.

Step 1: Prepare the cable for connection.

1. Using wire strippers, strip the insulating jacket from both ends of the signal cable to reveal about 15cm (5.9”) of the wire.
2. Strip the insulation from the ends of the wires.

Step 2: Open the front panel of the indoor unit.

Using a screwdriver,remove the cover of the electric control box on your indoor unit.

Step 3: Connect the wires to the terminals.

1. Thread the power cable and the signal cable through the wire outlet
2. Match the wire colors/labels with the labels on the terminal block. Firmly screw the wires of each wire to its corresponding terminal. Refer to the Serial Number and Wiring Diagram located on the cover of the electric control box.Terminal block wiring. When using 208V or 230V,connect L1 and L2. When using 115V,connect L1 and L2 (L2 is used as N).

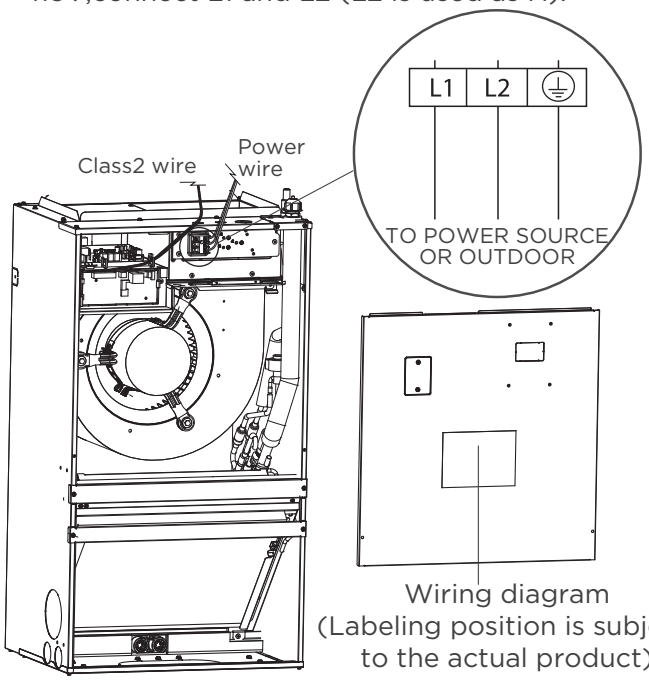

Wiring diagram
(Labeling position is subject to the actual product)

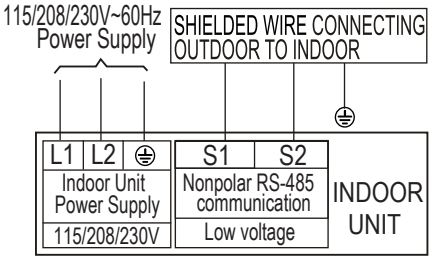

⚠ WARNING

ISOLATE THE POWER SUPPLY LEADS AND COMMUNICATION LEADS BY THE STRAIN RELIF AND KEEP POWER SUPPLY LEADS AWAY FROM COMMUNICATION LEADS.

3. Clamp down the cable with the cable clamp. The cable must not be loose or pull on the u-lugs.
4. Reattach the electric box cover.
5. Clamp down the cable with the cable clamp. The cable must not be loose or pull on the u-lugs.
6. Reattach the electric box cover

⚠ CAUTION

- While connecting the wires, please strictly follow the wiring diagram.
- The refrigerant circuit can become very hot. Keep the interconnection cable away from the copper tube.
- The holes on cover of the electronic control box must be threaded through with armored wires.

⚠ WARNING

The motor has two pairs of plugs. The red color indicates that the motor is connected to the plug when powered by 115V, and the white color indicates that the motor is connected to the plug when powered by 230V (default is connected to the white pair of plugs). When using a 208-230V power supply, this part remains unchanged; When using a 115V power supply, the motor wiring requires the use of a 115V motor pair plug. At this time, the white motor pair plug needs to be removed and the red motor pair plug needs to be connected. When the motor is plugged in red, the internal power supply must be 115V. If it is powered by a 208-230V power supply, the motor will be damaged.

OUTDOOR UNIT WIRING

⚠ WARNING

Before performing any electrical or wiring work, turn off the main power to the system.

Step 1: Prepare the cable for connection.

1. You must first choose the right cable size.
2. Using wire strippers, strip the rubber jacketfrom both ends of the signal cable to reveal approximately 5.9in(150mm) of wire.
3. Strip the insulation from the ends.
4. Stranded wire requires u-lugs or ring terminals to be crimped onto the ends of the wire.

NOTICE

- When connecting the wires, strictly follow the wiring diagram found inside the electrical box cover.
- Choose the cable type according to the local electrical switchs and regulations.
- Please choose the right cable size according to the Minimum Circuit Ampacity indicated on the nameplateof the unit.

Step 2: Remove the electric cover.

Remove the electric cover of the outdoor unit. If there is no cover on the outdoor unit, take off the bolts from the maintenance board and remove the protection board.

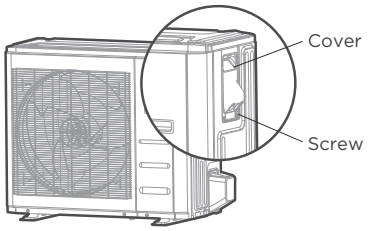

Step 3: Connect the u-lugs to the terminals

Match the wire colors/labels with the labels on the terminal block. Firmly screw the u-lug of each wire to its corresponding terminal.

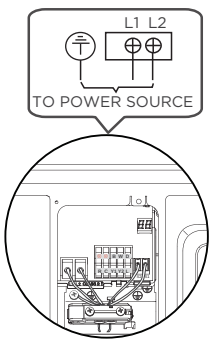

Outdoor Unit A

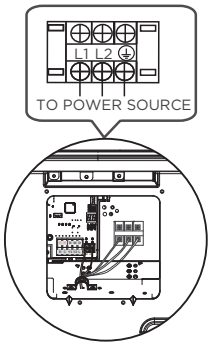

Outdoor Unit B

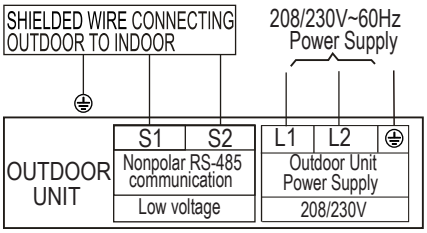

4. Clamp down the cable with the cable clamp.
5. Insulate unused wires with electrical tape. Keep them away from any electrical or metal parts.
6. Reinstall the cover of the electric control box.

In North America

1. Remove the wire cover from the unit by loosening the 3 screws.
2. Remove caps on the conduit panel.
3. Mount the conduit tubes(not included) on the caonduit panel.
4. Properly connect both the power supply and low voltage lines to the corresponding terminals on the terminal block.
5. Ground the unit in accordance with local switchs.
6. Be sure to size each wire allowing several inches longer than the required length for wiring.

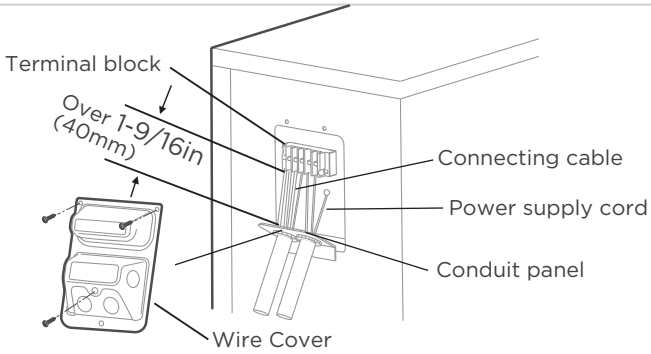

Please select the appropriate through-hole according to the diameter of the wire.

⚠ WARNING

ISOLATE THE POWER SUPPLY LEADS AND COMMUNICATION LEADS BY THE STRAIN RELIF AND KEEP POWER SUPPLY LEADS AWAY FROM COMMUNICATION LEADS.

INSTALLATION GUIDE FOR AHU USING 115V POWER SUPPLY

Step 1:

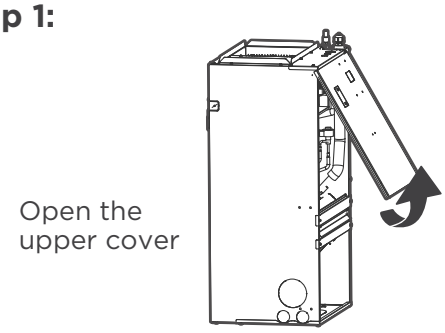

Step 2: When using 115V power supply, the fan motor wiring requires the use of 115V fan motor pair plug. At this time, the white fan motor pair plug needs to be removed and the red fan motor pair plug needs to be connected.

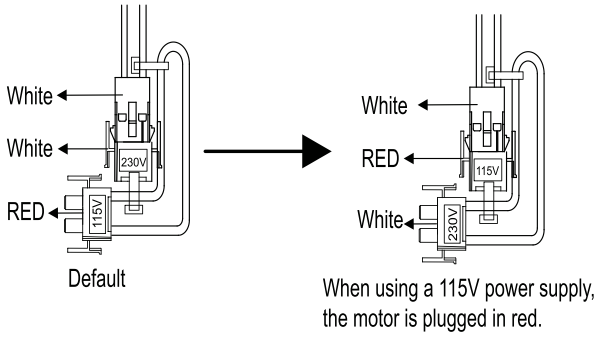

Step 3: Unplug temperature sensors T1, T2, T2A, T2B,refrigerant detection sensor and electronic expansion valve (EEV),and fan motor power pair plug（CN11） from the control board.

T1: IDU room temp. sensor(T1)
T2: IDU coil temp. sensor(T2)
T2A: Evaporator coil temperature sensor(T2A)
T2B: Evaporator coil inlet temperature sensor(T2B)

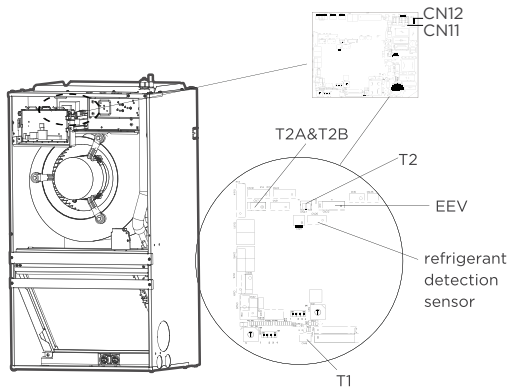

Step 4: Remove the two screws in electric cabinet.And take out electric cabinet.

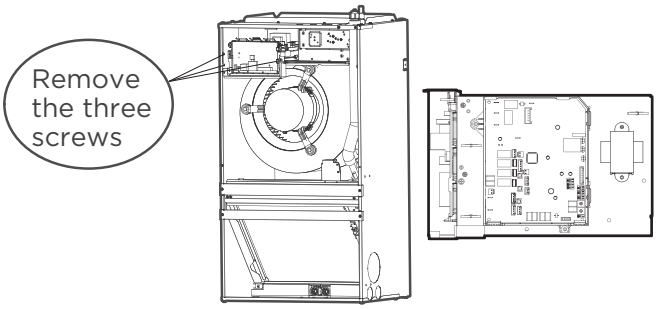

Step 5: Remove the blue connector from the control board CN12.

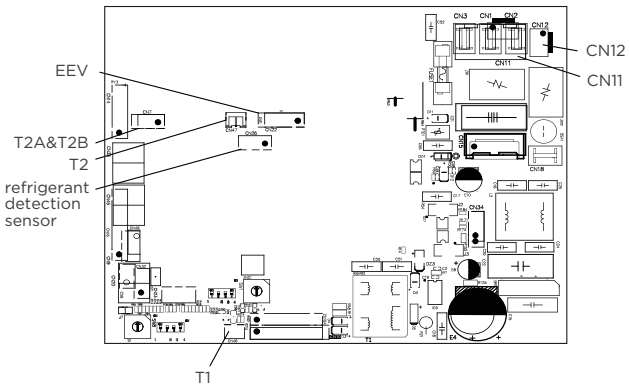

Step 6: Remove the red connector from the 24V transformer.

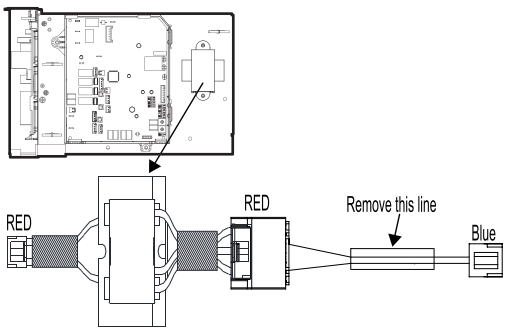

Step 7: Take the 24V transformer connection wire out from the accessory package. Connect the red connector to the 24V transformer and the blue connector to the control board CN12.

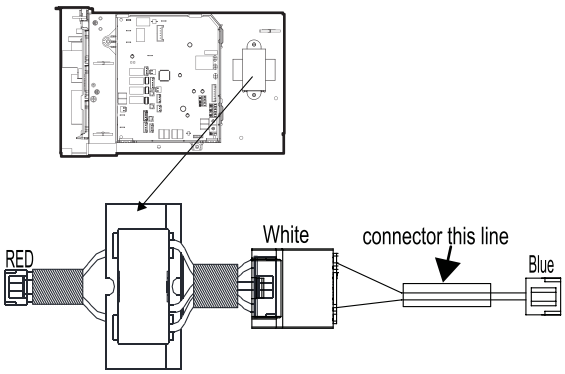

Step 7: Replace the electronic control box with the entire machine, fix it with screws, and insert the wire body properly. Plug temperature sensors T1, T2, T2A, T2B, refrigerant detection sensor and electronic expansion valve(EEV), and fan motor power pair plug(CN11) from the control board.

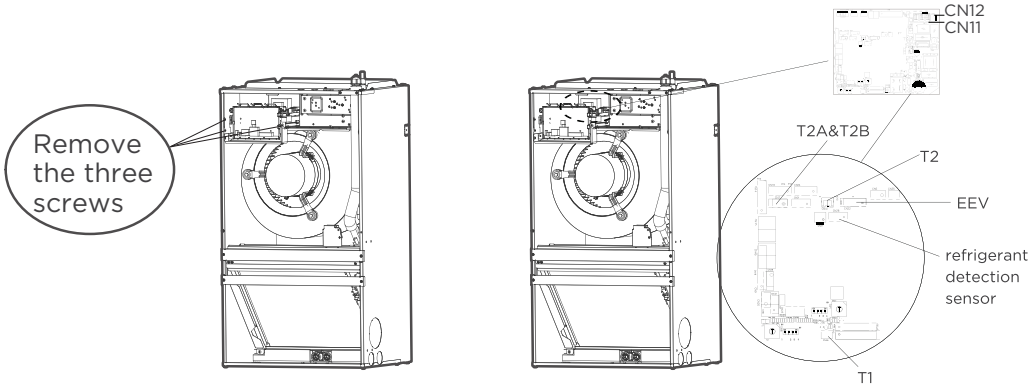

SPECIFIC WIRING METHODS

⚠ WARNING

Please refer to the wiring nameplate for the wiring method. Do not connect the power cord to the communication line, as this may damage the system.

Connection method A:

Refer to the wiring method of internal and external machine communication:

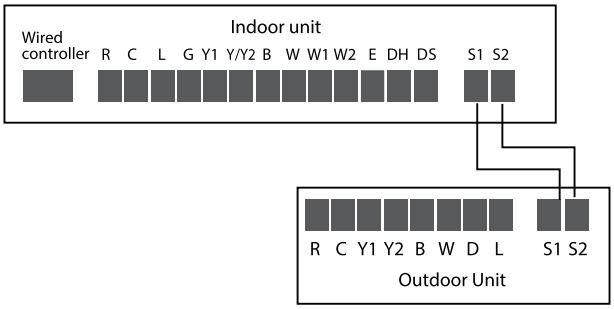

Connection method B:

To use a 24V thermostat, you need to refer to the following wiring:

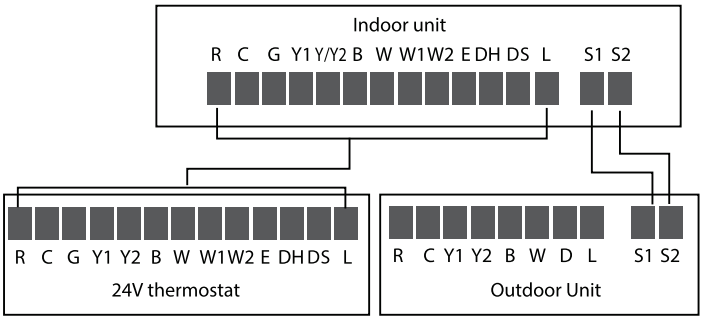

When using a 24v thermostat, please refer to the non-communicating wiring diagrams that follow:

Connection method C:

The following wiring diagram are suitable for the AHU and ODU with 24V thermostat.

Non-communication scheme wiring reference

• Wiring for 4H and 2C thermostat

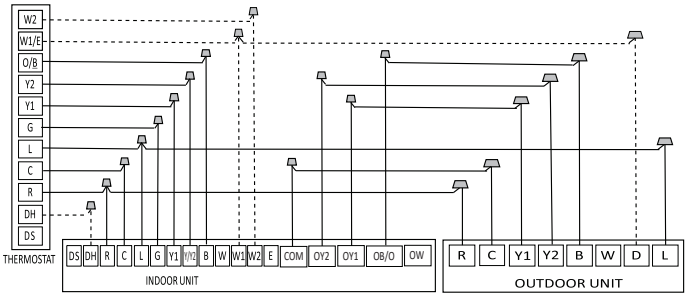

S4-2 Default on, DH function off. Turn switch off to activate DH function.

S4-4 Default on, W1 and W2 shorted for single stage Aux heat operation. Turn off to separate stages.

• Wiring for 3H and 1C thermostat

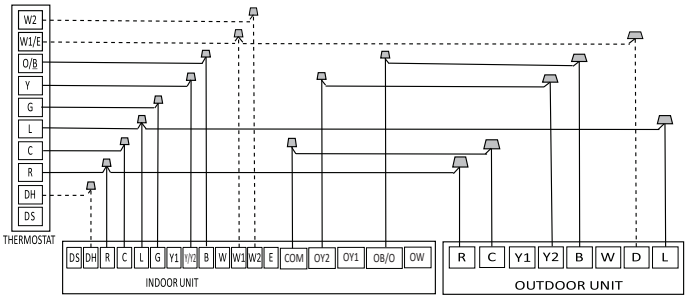

S4-2 Default on, DH function off. Turn switch off to activate DH function.

S4-4 Default on, W1 and W2 shorted for single stage Aux heat operation. Turn off to separate stages.

• Wiring for 3H and 2C thermostat

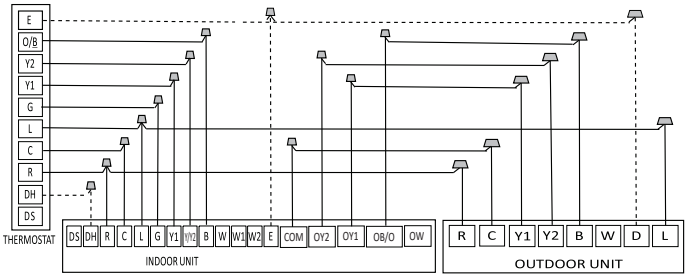

S4-2 Default on, DH function off. Turn switch off to activate DH function.

Emergency heating control two groups of electric heating at the same time

• Wiring for 3H and 2C thermostat

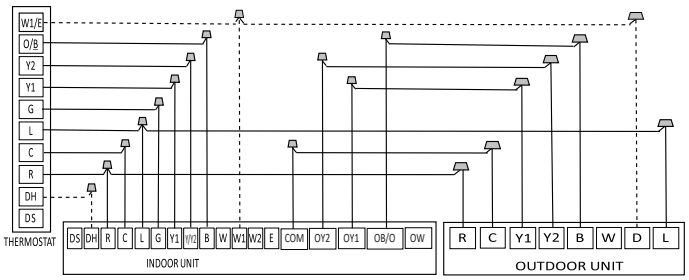

S4-2 Default on, DH function off. Turn switch off to activate DH function.

S4-4 Default on, W1 and W2 shorted for single stage Aux heat operation. Turn off to separate stages.

• Wiring for 2H and 2C thermostat

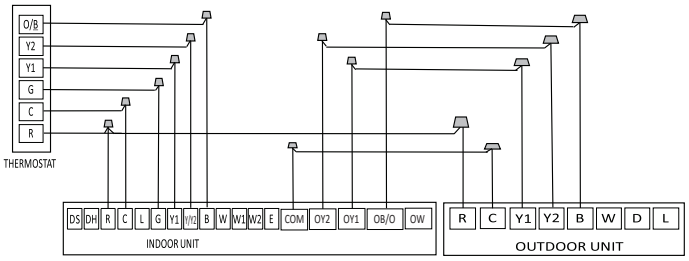

• Wiring for 2H and 1C thermostat

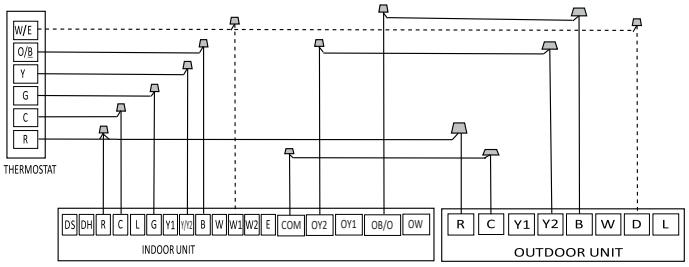

S4-4 Default on, W1 and W2 shorted for single stage Aux heat operation. Turn off to separate stages.

• Wiring for 1H and 1C thermostat

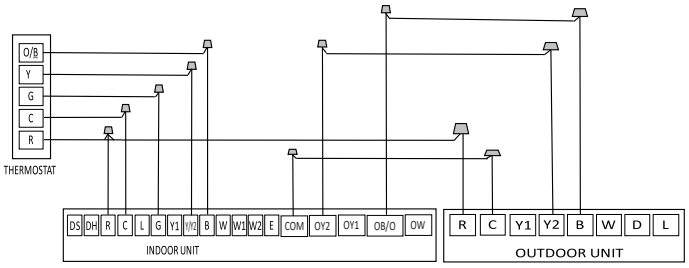

• Wiring for 1H and 1C thermostat

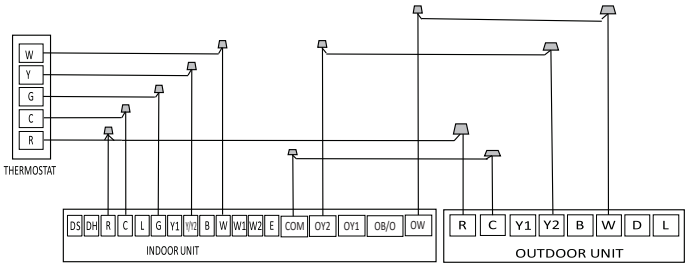

Optional function wiring:

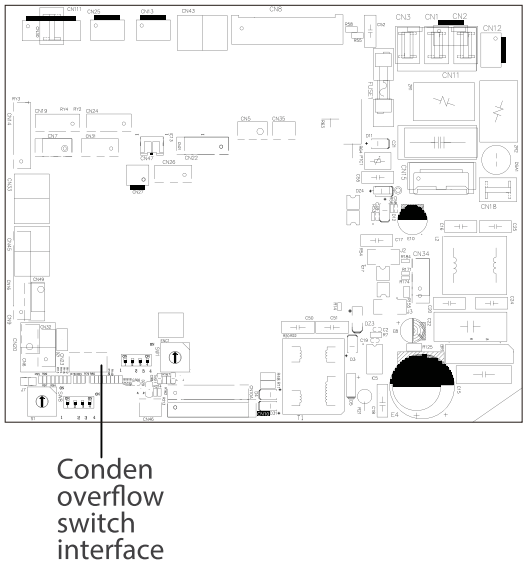

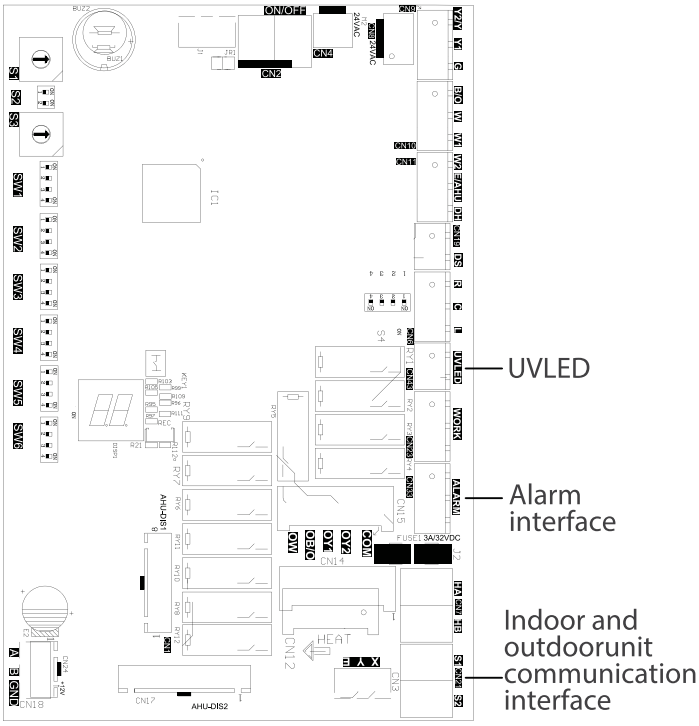

Condensate overflow switch:

The unit will accommodate a remote condensate overflow switch. To enable, remove jumper J7, and connect the installer provided condensate overflow device to CN23 per below. When an overflow condition is present, the device should open connection signaling the unit to turn off the system.

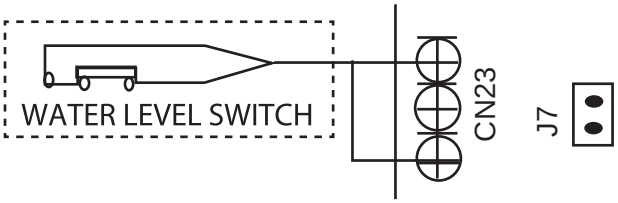

The fault warning:

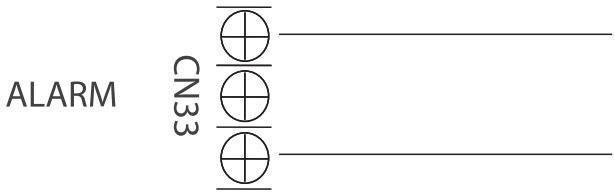

Alarm output:

An alarm output (CN33) can be utilized if actions are required when a fault is present. This is a passive outlet port, so you will need to input a voltage signal. The relay is normally-open for normal operation, and closed when a fault condition is active.

Humidifier control:

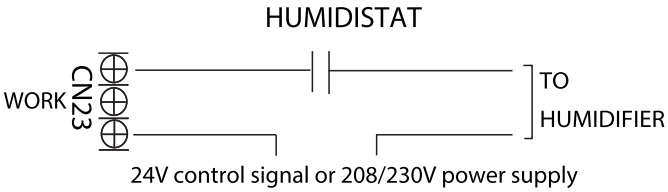

To connect a humidifier, utilize the passive signal “WORK” output (CN23) port as well as the R and C wires on the controller, and wire the humidistat and humidifier per above wiring diagram. When the fan is running, the CN23 relay will be closed, which will allow power to the humidifier when the humidistat is below humidity setpoint. If the thermostat or zone controller has an HUM interface, connect the humidifier directly to the HUM and C ports.

UV,fresh air or ion generator wiring

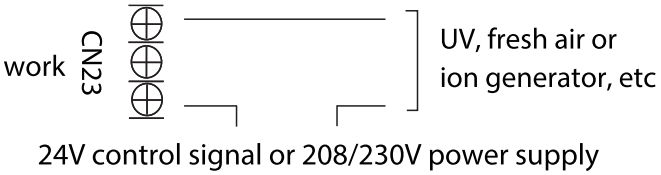

The WORK port is linked with the fan. When the fan is running, the relay is closed.

Control logic

Indoor unit connector

Connector	Purpose
R	24V Power Connection
C	Common
G	Fan Control
Y1	Low Demand
Y/Y2	High Demand
B	Heating Reversing Valve
W	Heating control
W1	Stage 1 Electric Heating
W2	Stage 2 Electric Heating
E/AUX	Emergency Heating
DH/BK	Dehumidification/Zoning control
DS	Reserved Signal
L	System Fault Signal

Outdoor unit connector

Connector	Purpose
R	24V Power Connection
C	Common
Y1	Low Demand
Y2	High Demand
B	Heating Reversing Valve
W	Heating control
D	**Defrost control**
L	System Fault Signal

LED display

The control displays unit status as well as any active fault codes on the LED display. If the unit is functioning normally, the LED will display current temperature setpoint. When a fault code is active, the display will flash quickly the active fault code. Please refer to the fault code table located in the troubleshooting section of the manual for detailed fault code information.

KEY1 Instructions (For Wired Controller only)

- Press KEY1 to enter the forced automatic mode, press KEY1 again to enter the forced cooling mode (LED display FC), and press KEY1 again to shut down.
- Long press KEY1 under forced cooling mode (LED display FC) 5s to enter forced defrost mode.

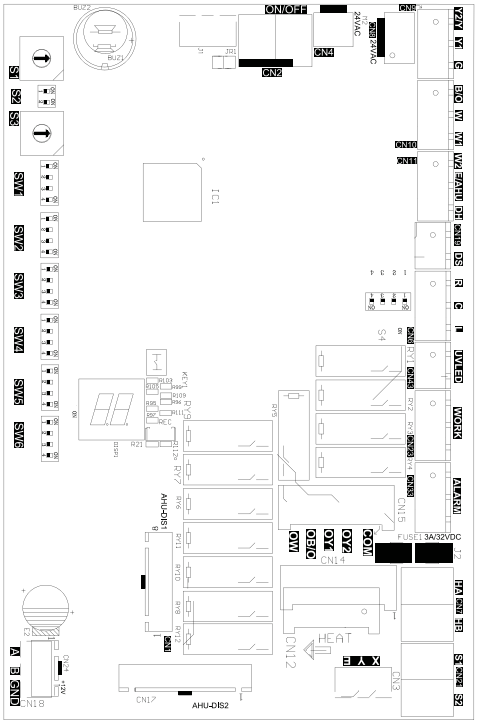

DIP switch definitions

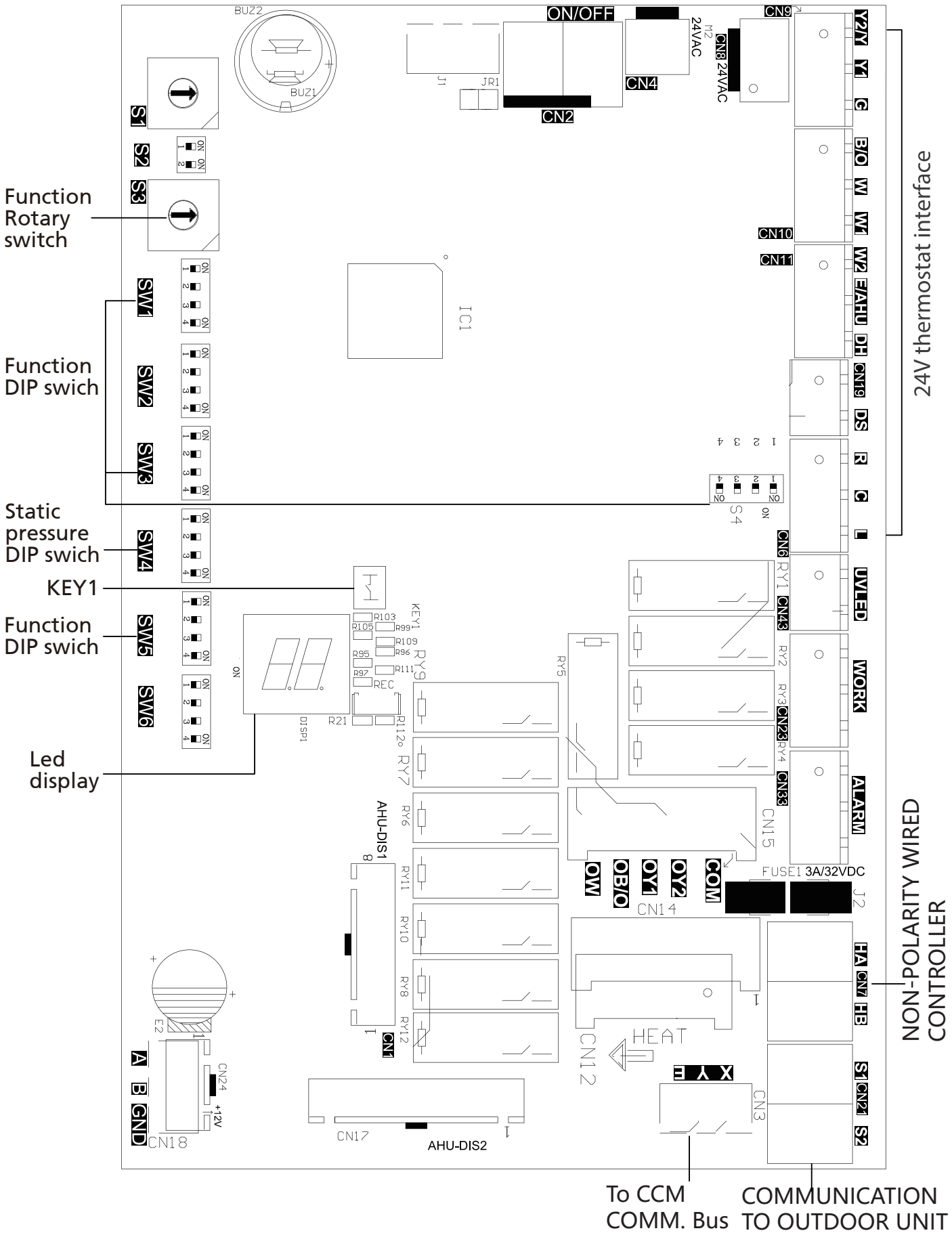

Function DIP switch settings:

The 24V thermostat mode needs to refer to the following settings:

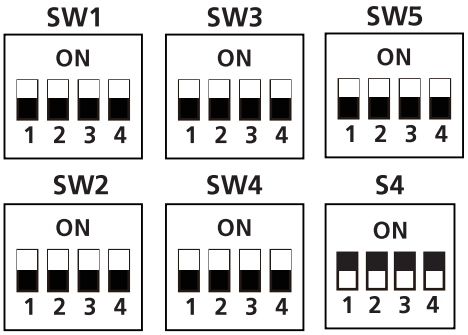

SW4-1	000 is the default 000/001/010/011/100/101/110/111,internal machines with different abilities, electric heating and PSC classification for use.
SW4-2	
SW4-3	

Function combination table of SW1-1 and SW1-4:

SW1	Control type	IDU and ODU Connection	Note
ON 1 2 3 4	Wired controller / 24V thermostat	(S1+S2) / 24V connection	Auto Discovery
ON 1 2 3 4	Wired controller	S1+S2	Scenario 2
ON 1 2 3 4	24V Thermostat	S1+S2	Scenario 1
ON 1 2 3 4	24V Thermostat	24V connection	Scenario 3

Indoor unit dial code

No.	Dial Code	Control Scenario	Function	ON	OFF	Note
1	SW1-2	1,2,3	Anti-cold blow protection option	NO	[Default] YES	
2	SW1-3	1,2,3	Single cooling / heating and and cooling options	Cooling	[Default] Cooling & Heating	
3	SW2-1	1	Compressor Running (demand working with heat pump+ Electric heat)	Compressor slower speed	[Default] Faster Compressor	Only affects compressor and W1
4	SW2-1	2	Temperature differential to activate first stage auxiliary heat(the GAP of T1 and Ts),Wire controller demand with heat pump+Electric heat working together	2°F(1 °C)	[Default] 4°F(2°C)	
5	SW2-2	2	Electric heat on delay	YES	[Default]NO	
6	SW2-3	2	Electric auxiliary heating delay to start time	30 minutes	[Default] 15 minutes	Based on SW2-2 is ON
7	SW2-4	1	Compressor	The operation of heat pump is limited by the outdoor temperature, and the operation of auxiliary heat is not limited.The system makes judgments according to the following rules: 1) The compressor can be operated when the outdoor temperature is ≥S3 DIP switch temperature +2 °C. 2) The compressor cannot be operated when the outdoor temperature is lower than the S3 DIP switch temperature.	[Default]The operation of heat pump is limited by the outdoor temperature, and the operation of auxiliary heat is not limited. The system makes judgments based on the following rules: 1) The compressor cannot be operated when the outdoor temperature is lower than the S3 DIP switch. 2) The compressor can be operated when the outdoor temperature is ≥S3 DIP switch temperature +2 °C.	SW2-4 and S3 need to working together
8	SW2-4	2	Compressor/Auxiliary heat outdoor ambient lockout	The operation of heat pump is limited by the outdoor temperature, and the operation of auxiliary heat is not limited.The system makes judgments according to the following rules: 1) The compressor can be operated when the outdoor temperature is ≥S3 DIP switch temperature +2 °C. 2) The compressor cannot be operated when the outdoor temperature is lower than the S3 DIP switch temperature.	[Default]Only one heat pump or auxiliary heat can be operated .The system makes judgments according to the following rules: 1) When the outdoor temperature is lower than the S3 DIP switch temperature,the compressor is not allowed to operated, but auxiliary heat is allowed to operated ; 2) When the outdoor temperature is ≥S3 DIP switch temperature +2(°C), the compressor can be operated, but auxiliary heat cannot be operated.	
9	Rotary Switch S3	1,2	Set outdoor temperature Limitation (for auxiliary heating or compressor)	Table A		
10	SW3-1	1	Maximum continuous runtime allowed before system automatically stages up capacity to satisfy set point. This adds 1 to 5°F to the user set point in the calculated control point to increase capacity and satisfy user set point	30 minutes	[Default] 90 minutes	
11	SW3-2	1	Cooling and heating Y/Y2 temperature differential adjustment.	Compressor slower speed	[Default] Faster Compressor	Only affects compressor
12	SW3-3	1	Compressor Running (demand working with heat pump+ Electric heat)	Compressor slower speed	[Default] Faster Compressor	Only affects compressor and W2
13	SW3-3	2	Temperature differential to activate second stage auxiliary heating(the GAP of T1 and Ts)Wire controller demand with heat pump+Electric heat working together	4°F(2°C)	[Default] 6 °F(3°C)	
14	SW3-4	1,3	Fan speed of cooling mode when 24V Thermostat is applied for.	Turbo	High	
15	SW4-1 SW4-2 SW4-3	1,2,3	Electric heat nominal CFM adjustment	Available settings are 000/001/010/011. Each digit corresponds an indiviual swith position. For example [SW4-1 OFF, SW4-2 ON, SW4 -3 OFF] = 010		
16	SW4-4	2	Temperature differential to activate third stage auxiliary heating(the GAP of T1 and Ts)Wire controller demand with heat pump+ Electric heat working together	6°F(3°C)	[Default]8°F(4°C)	Only valid for product which has three stage auxiliary heating.
17	S4-4	1,3	Default ON	[Default] For single stage supplemental heat,W1 and W2 are connected	For dual stage supplemental heat, W1 and W2 are controlled independently.	

18	S4-2	1,3	DH function selection	[Default] Dehumidification control not available	Dehumidification feature is enabled through thermostat	
19	SW5-3	1,2,3	L or Alarm relay selection	L output 24V or alarm relay close only when refrigerant sensor fault or R454B refrigerant leakage be detected	[default] L output 24V or alarm relay close when any fault be detected	
20	SW5-4	1,2,3	R output selection	R stop ouput 24V when refrigerant sensor fault or R454B refrigerant leakage be detected	[default] R keep ouput 24V even when refrigerant sensor fault or R454B refrigerant leakage be detected	

Control Scenario	24V Tstat, S1+S2	1
	Wired Controller S1+S2	2
	Full 24V	3

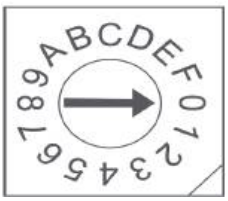

Address DIP switch:

Address dialing S1+SW8: When the user uses the centralized controller, the address dialing is required.
Network address: The address silkscreen is NET address, which is composed of a 16-bit address rotary code S1 plus a two-digit DIP switch SW8 [Set during engineering installation, no network function does not need to be set]
When SW8 is 00 (the dialing code is not connected), the network address value is the value of S1;
When SW8 is 10 (corresponding to the switch of the hardware connected to the 10K resistor), the network address value is S1 plus 16;
Determined by dial code SW8 1-10K 2-5.1K
When SW8 is 01 (corresponding to the dial code of the 5.1K resistor connected to the hardware is turned on), the network address value is the value of S1 plus 32;
When SW8 is 11 (all dialing codes are on), the network address value is the value of S1 plus 48.

Table A

S3	S3 (°F)	S3 (°C)
0	OFF	OFF
1	-22	-30
2	-18	-28
3	-15	-26
4	-11	-24
5	-8	-22
6	-4	-20
7	3	-16
8	10	-12
9	18	-8
A	25	-4
B	32	0
C	36	2
D	39	4
E	43	6
F	46	8

Determined by dial code SW8 1-10K 2-5.1K

Dial code selection	Website address
	S1 + 48
	S1 + 32
	S1 + 16
	S1

Outdoor unit DIP Switch setting

Press the SW4 button 10S for force defrosting

NO.	Dial code	Features	ON	OFF
1	SW1-1	Function to be defined		
2	SW1-2	Communication dial code	24V communication only	24V communication/ 485 communication
3	SW1-3	Strong cold and strong heat function	The cooling/heating target pressure compensation value is valid	The cooling/heating target pressure compensation value is invalid
4	SW1-4	Enhanced defrosting function	Enhanced defrosting	Default setting(standard defrost algorithm)

Air volume table

Capacity	External Static Pressure Range	Fan speed	Electric auxiliary heat module	24V thermostat		Wired controller		Airflow volume (CFM)
				DIP Switch	24V terminal engaged	DIP Switch	Mode	
18K(1.5 Ton)	0 - 0.80 in.wc.	Cooling Turbo	—	SW3-4=ON	Y2/Y	—	Cool	618
		Cooling High	—	SW3-4=OFF	Y2/Y	—	Cool	576
		Cooling Medium	—	—	Y1	—	Cool	529
		Cooling Low	—	—	—	—	Cool	488
		Heat Pump Turbo	—	—	—	—	Heat	565
		Heat Pump High	—	—	B+Y2/Y, W	—	Heat	541
		Heat Pump Medium	—	—	Y1	—	Heat	435
		Heat Pump Low	—	—	—	—	Heat	400
		Electric auxiliary heat module 0(Default)	10kW	SW4-1=OFF SW4-2=OFF SW4-3=OFF	W1, W2, AUX	SW4-1=OFF SW4-2=OFF SW4-3=OFF	Heat + AUX, AUX	653
		Electric auxiliary heat module 1	10kW, 8kW	SW4-1=OFF SW4-2=OFF SW4-3=ON	W1, W2, AUX	SW4-1=OFF SW4-2=OFF SW4-3=ON	Heat + AUX, AUX	624
		Electric auxiliary heat module 2	8kW	SW4-1=OFF SW4-2=ON SW4-3=OFF	W1, W2, AUX	SW4-1=OFF SW4-2=ON SW4-3=OFF	Heat + AUX, AUX	594
		Electric auxiliary heat module 3	5kW, 3kW	SW4-1=OFF SW4-2=ON SW4-3=ON	W1, W2, AUX	SW4-1=OFF SW4-2=ON SW4-3=ON	Heat + AUX, AUX	565
24K(2 Ton)	0 - 0.80 in.wc.	Cooling Turbo	—	SW3-4=ON	Y2/Y	—	Cool	824
		Cooling High	—	SW3-4=OFF	Y2/Y	—	Cool	759
		Cooling Medium	—	—	Y1	—	Cool	694
		Cooling Low	—	—	—	—	Cool	629
		Heat Pump Turbo	—	—	—	—	Heat	788
		Heat Pump High	—	—	B+Y2/Y, W	—	Heat	753
		Heat Pump Medium	—	—	Y1	—	Heat	641
		Heat Pump Low	—	—	—	—	Heat	524
		Electric auxiliary heat module 0(Default)	—	SW4-1=OFF SW4-2=OFF SW4-3=OFF	W1, W2, AUX	SW4-1=OFF SW4-2=OFF SW4-3=OFF	Heat + AUX, AUX	871
		Electric auxiliary heat module 1	10kW	SW4-1=OFF SW4-2=OFF SW4-3=ON	W1, W2, AUX	SW4-1=OFF SW4-2=OFF SW4-3=ON	Heat + AUX, AUX	841
		Electric auxiliary heat module 2	10kW, 8kW	SW4-1=OFF SW4-2=ON SW4-3=OFF	W1, W2, AUX	SW4-1=OFF SW4-2=ON SW4-3=OFF	Heat + AUX, AUX	818
		Electric auxiliary heat module 3	5kW	SW4-1=OFF SW4-2=ON SW4-3=ON	W1, W2, AUX	SW4-1=OFF SW4-2=ON SW4-3=ON	Heat + AUX, AUX	788
30K(2.5 Ton)	0 - 0.80 in.wc.	Cooling Turbo	—	SW3-4=ON	Y2/Y	—	Cool	988
		Cooling High	—	SW3-4=OFF	Y2/Y	—	Cool	894
		Cooling Medium	—	—	Y1	—	Cool	806
		Cooling Low	—	—	—	—	Cool	712
		Heat Pump Turbo	—	—	—	—	Heat	918
		Heat Pump High	—	—	B+Y2/Y, W	—	Heat	876
		Heat Pump Medium	—	—	Y1	—	Heat	665
		Heat Pump Low	—	—	—	—	Heat	453
		Electric auxiliary heat module 0(Default)	—	SW4-1=OFF SW4-2=OFF SW4-3=OFF	W1, W2, AUX	SW4-1=OFF SW4-2=OFF SW4-3=OFF	Heat + AUX, AUX	1088
		Electric auxiliary heat module 1	10kW	SW4-1=OFF SW4-2=OFF SW4-3=ON	W1, W2, AUX	SW4-1=OFF SW4-2=OFF SW4-3=ON	Heat + AUX, AUX	1029
		Electric auxiliary heat module 2	10kW, 8kW	SW4-1=OFF SW4-2=ON SW4-3=OFF	W1, W2, AUX	SW4-1=OFF SW4-2=ON SW4-3=OFF	Heat + AUX, AUX	976
		Electric auxiliary heat module 3	5kW	SW4-1=OFF SW4-2=ON SW4-3=ON	W1, W2, AUX	SW4-1=OFF SW4-2=ON SW4-3=ON	Heat + AUX, AUX	918

Air volume table

Capacity	External Static Pressure Range	Fan Speed	Electric auxiliary heat module	24V thermostat		Wired controller		Airflow volume (CFM)
				DIP Switch	24V terminal engaged	DIP Switch	Mode	
36K (3 Ton)	0 - 0.80 in.wc.	Cooling Turbo	—	SW3-4=ON	Y2/Y	—	Cool	1188
		Cooling High	—	SW3-4=OFF	Y2/Y	—	Cool	1082
		Cooling Medium	—	—	Y1	—	Cool	971
		Cooling Low	—	—	—	—	Cool	865
		Heat Pump Turbo	—	—	—	—	Heat	1112
		Heat Pump High	—	—	B+Y2/Y, W	—	Heat	1059
		Heat Pump Medium	—	—	Y1	—	Heat	794
		Heat Pump Low	—	—	—	—	Heat	582
		Electric auxiliary heat module 0(Default)	—	SW4-1=OFF SW4-2=OFF SW4-3=OFF	W1, W2, AUX	SW4-1=OFF SW4-2=OFF SW4-3=OFF	Heat + AUX, AUX	1306
		Electric auxiliary heat module 1	—	SW4-1=OFF SW4-2=OFF SW4-3=ON	W1, W2, AUX	SW4-1=OFF SW4-2=OFF SW4-3=ON	Heat + AUX, AUX	1241
		Electric auxiliary heat module 2	10kW, 8kW	SW4-1=OFF SW4-2=ON SW4-3=OFF	W1, W2, AUX	SW4-1=OFF SW4-2=ON SW4-3=OFF	Heat + AUX, AUX	1176
		Electric auxiliary heat module 3	5kW, 8kW	SW4-1=OFF SW4-2=ON SW4-3=ON	W1, W2, AUX	SW4-1=OFF SW4-2=ON SW4-3=ON	Heat + AUX, AUX	1112

NOTICE

The constant airflow volume motor is applied. So the airflow volume is constant at all ESP within stated range.

SPECIFICATIONS

Cooling and Heating power specifications(Regular Heat Series)

MODEL(Btu/h)			18K	24K	30K	36K
POWER (outdoor)		PHASE	1 Phase			
		FREQUENCY AND VOLT	208/230V,60Hz			
OUTDOOR UNIT		MCA	16A	19A	22.5A	24A
		MOP	20A	20A	25A	30A
LINES GAUGE	OUTDOOR UNIT POWER LINE	LINE QUANTITY	2+Ground			
		LINE DIAMETER(AWG)	14	12	12	10
	OUTDOOR-INDOOR SIGNAL LINE	LINE QUANTITY	2			
		LINE DIAMETER(AWG)	20			
	THERMOSTAT SIGNAL LINE	LINE QUANTITY	——			
		LINE DIAMETER(AWG)	18			

Cooling and Heating power specifications(Hyper Heat Series)

MODEL(Btu/h)			18K	24K	30K	36K
POWER (outdoor)		PHASE	1 Phase			
		FREQUENCY AND VOLT	208/230V,60Hz			
OUTDOOR UNIT		MCA	16A	19A	29.5A	29A
		MOP	20A	20A	30A	30A
LINES GAUGE	OUTDOOR UNIT POWER LINE	LINE QUANTITY	2+Ground			
		LINE DIAMETER(AWG)	12	12	10	10
	OUTDOOR-INDOOR SIGNAL LINE	LINE QUANTITY	2			
		LINE DIAMETER(AWG)	20			
	THERMOSTAT SIGNAL LINE	LINE QUANTITY	——			
		LINE DIAMETER(AWG)	18			

NOTICE

Line Diameter Sizing per NFPA 70 (2020), Table 310.15 (B) (16) Based on type NM-B Romex wire. Other sizing options are possible. Consult NFPA 70 or Licensed Electrician for alternate sizing.

4. AIR EVACUATION

NOTICE

When opening valve stems, turn the hexagonal wrench until it hits against the stopper. Do not try to force the valve to open further.

Preparations and precautions

Air and foreign matter in the refrigerant circuit can cause abnormal rises in pressure, which can damage the air conditioner, reduce its efficiency, and cause injury. Use a vacuum pump and manifold gauge to evacuate the refrigerant circuit, removing any non-condensable gas and moisture from the system. Evacuation should be performed upon initial installation and when unit is relocated.

BEFORE PERFORMING EVACUATION

- ☑ Check to make sure the connective pipes between the indoor and outdoor units are connected properly .
- ☑ Check to make sure all wiring is connected properly.

Evacuation Instructions

1. Connect the charge hose of the manifold gauge to service port on the outdoor unit's low pressure valve.
2. Connect another charge hose from the manifold gauge to the vacuum pump.
3. Open the Low Pressure side of the manifold gauge. Keep the High Pressure side closed.
4. Turn on the vacuum pump to evacuate the system.
5. Run the vacuum for at least 15 minutes, or until the Compound Meter reads -750 Microns(-10^5Pa).

Outdoor unit

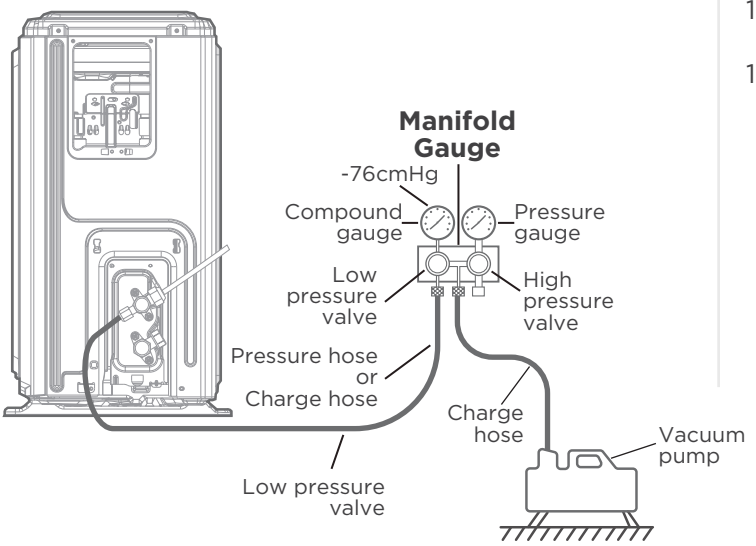

6. Close the Low Pressure side of the manifold gauge, and turn off the vacuum pump.
7. Wait for 5 minutes, then check that there has been no change in system pressure.
8. If there is a change in system pressure, refer to Gas Leak Check section for information on how to check for leaks. If there is no change in system pressure, unscrew the cap from the packed valve (high pressure valve).
9. Insert hexagonal wrench into the packed valve (high pressure valve) and open the valve by turning the wrench in a 1/4 counterclockwise turn. Listen for gas to exit the system, then close the valve after 5 seconds.
10. Watch the Pressure Gauge for one minute to make sure that there is no change in pressure. The Pressure Gauge should read slightly higher than atmospheric pressure.
11. Remove the charge hose from the service port.

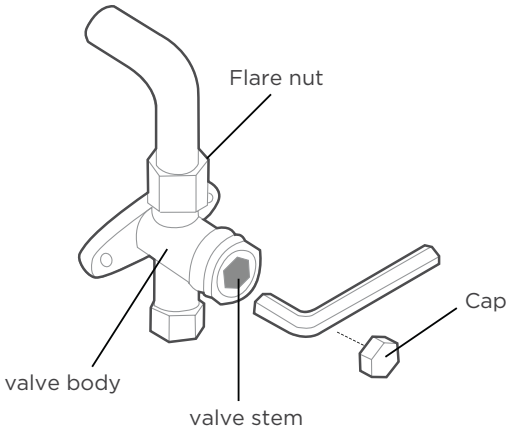

12. Using hexagonal wrench, fully open both the high pressure and low pressure valves.
13. Tighten valve caps on all three valves (service port, high pressure, low pressure) by hand. You may tighten it further using a torque wrench if needed.

NOTE ON ADDING REFRIGERANT

⚠ CAUTION

DO NOT mix refrigerant types.

Some systems require additional charging depending on pipe lengths. In North America, the standard pipe length is 25ft (7.5m). The refrigerant should be charged from the service port on the outdoor unit's low pressure valve. The additional refrigerant to be charged can becalculated using the following formula:

	Liquid Side Diameter	
Refrigerant	Φ1/4in(Φ6.35mm)	Φ3/8in(Φ9.52mm)
R454B: **(orifice tube in the indoor unit):**	(Total pipe length - standara pipe length) ×30g(0.32oz)/m(ft)	(Total pipe length - standara pipe length) ×65g(0.7oz)/m(ft)

5. TEST RUN

⚠ CAUTION

Failure to perform the test run may result in unit damage, property damage, or personal injury.

Before test run

A test run must be performed after the entire system has been completely installed. Confirm the following points before performing the test:
a) Indoor and outdoor units are properly installed.
b) Piping and wiring are properly connected.
c) No obstacles near the inlet and outlet of the unit that might cause poor performance or product malfunction.
d) Refrigeration system does not leak.
e) Drainage system is unimpeded and draining to a safe location.
f) Insulation of piping and duct is properly installed.
g) Grounding wires are properly connected.
h) Length of the piping and additional refrigerant capacity have been recorded.
i) Power voltage is the correct voltage for the air conditioner

Test run instryctions

1. Open both the liquid and gas service valves.
2. Turn on the main power switch and allow the unit to warm up.
3. Set the air conditioner to COOL mode.
4. For the Indoor Unit
   a.Double check to see if the room temperature is being registered correctly.
   b.Ensure the manual buttons on the indoor unit works properly.
   c.Check to see that the drainage system is unimpeded and draining smoothly.
   d.Ensure there is no vibration or abnormal noise during operation.
5. For the Outdoor Unit
   a. Check to see if the refrigeration system is leaking.
   b. Make sure there is no vibration or abnormal noise during operation.
   c. Ensure the wind, noise, and water generated by the unit do not disturb your neighbors or pose a safety hazard.
6. Drainage Test
   a. Ensure the drainpipe flows smoothly. New buildings should perform this test before finishing the ceiling.
   b. Turn on the main power switch and run the air conditioner in COOL mode.
   c. Check to see that the water is discharged. It may take up to one minute before the unit begins to drain depending on the drainpipe.
   d. Make sure that there are no leaks in any of the piping.
   e. Stop the air conditioner. Turn off the main power switch and reinstall the test cover.

NOTICE

If the unit malfunctions or does not operate according to your expectations, please referto the Troubleshooting section of Service Manual before calling customer service.

24V SIGNAL CHART

		24V input terminal										
Mode	Priority	G	Y1	Y/Y2	B	W	W1	W2	E/AUX	DH	Fan speed	Display
OFF	/	0	0	0	0	0	0	0	0	*	OFF	00
FAN	7	1	0	0	*	0	0	0	0	*	Low	01
Cooling stage 1	6	*	1	0	0	0	0	0	0	1	Mid	02
Cooling stage 2		*	*	1	0	0	0	0	0	1	High	03
Dehumidification 1		*	1	0	0	0	0	0	0	0	Low	04
Dehumidification 2		*	*	1	0	0	0	0	0	0	Low	05
Heat pump stage 1	5	*	1	0	1	0	0	0	0	1	Mid	06
Heat pump stage 2		*	*	1	1	0	0	0	0	1	High	07
Heat pump stage 2		*	*	*	*	1	0	0	0	1	High	
Electric auxiliary heat module 1	3	*	0	0	*	0	1	0	0	*	Turbo	08
Electric auxiliary heat module 2		*	0	0	*	0	0	1	0	*	Turbo	
Electric auxiliary heat module 1 and 2		*	0	0	*	0	1	1	0	*	Turbo	09
Heat pump stage 1 + Electric auxiliary heat module 1	4	*	1	0	1	0	1	0	0	1	Turbo	10
Heat pump stage 1 + Electric auxiliary heat module 2		*	1	0	1	0	0	1	0	1	Turbo	
Heat pump stage 2 + Electric auxiliary heat module 1		*	*	1	1	0	1	0	0	1	Turbo	
Heat pump stage 2 + Electric auxiliary heat module 1		*	*	*	*	1	1	0	0	1	Turbo	
Heat pump stage 2 + Electric auxiliary heat module 2		*	*	1	1	0	0	1	0	1	Turbo	
Heat pump stage 2 + Electric auxiliary heat module 2		*	*	*	*	1	0	1	0	1	Turbo	
Heat pump stage 1 + Electric auxiliary heat module 1 and 2		*	1	0	1	0	1	1	0	1	Turbo	11
Heat pump stage 2 + Electric auxiliary heat module 1 and 2		*	*	1	1	0	1	1	0	1	Turbo	
Heat pump stage 2 + Electric auxiliary heat module 1 and 2		*	*	*	*	1	1	1	0	1	Turbo	
Emergency heat	1	*	*	*	*	*	*	*	1	*	Turbo	12
Heating zone control	2	*	1	0	1	0	*	*	0	0	Low	13
Heating zone control		*	*	1	1	0	*	*	0	0	Low	
Heating zone control		*	*	*	*	1	*	*	0	0	Low	

Note:
1: 24V signal
0: No 24V signal
*: 1 or 0.
The AHU will turn off if the 24V input cannot meet the table.

The design and specifications are subject to change without prior notice for product improvement. Consult with the sales agency or manufacturer for details. Any updates to the manual will be uploaded to the service website, please check for the latest version.

SWVI0125A